www.greenbrier-europe.com

GREENBRIER
Europe



Product catalog

Freight wagons • Tank wagons • Car carriers • Bogies

Product portfolio | Wagon manufacturing with maximum precision

A wide range of wagons and bogies



Intermodal wagons

- Sgnss 60´
- Sggrss 80´
- Sggnss 80´
- Sggmrss 90´
- Sffggmrrss
- FFA-G 2 x 40'
- FLA 2 x 40´
- FKA 2 x 50´
- FEA 60´
- FEA 2 x 60´



Tank wagons

- Zags 53 m³
- Zacens 73 m³
- Zaens 73 m³
- Zacens 79 m³
- Za(c)ns 88 m³
- Za(c)ns 97 m³
- Zacns 98 m³
- 102 m³-Z08D
- Zags 103 m³
- Zags 106 m³
- Zags 113 m³
- Zags 117 m³
- Zags 123 m³



Flat wagons

- Rijmmns 660



Box wagons

- JNA UK 42.9 m³
- JNA 60 m³
- Eamnos 57 m³-E06A & E06B
- Eamnos 72 m³-E04E
- Eanos 82.5 m³



Covered wagons

- Rils-y 653
- Hbbillns
- Habbii(ll)ns
- Habbii(ll)ns (Habbiins)-H01A



Hopper wagons

- Tanoos 123 m³
- Facnps 48 m³-F11A
- Faccns 49 m³
- Fanpps 55 m³
- Falns 184 77 m³
- Falns 85 m³
- Falns 181 86.6 m³
- Falns 87 m³
- Tanpps 55 m³-T05A6
- Tanoos 78 m³-T03A
- Tadns 82 m³
- Tagnoos 898 90 m³
- Tagnpps 95 m³
- Tagnpps 102 m³
- Tagnpps 130 m³



Steel product wagons
- Shimmns S10B
- Shimmns S12A
- Shimmns ttu 728
- Shimmns
- Smmnps slab wagon
- Sfhimmns
- Shmmnss



Car carriers
- Laaers L04A
- Laadrs
- Laaers L02A
- Laadgrs L04A
- Laaers L07A
- Laaers L08A
- Laads L09A

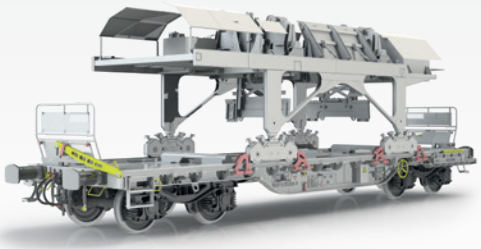

Special wagons
- Faccns (Xans)
- Faeeprrs (SSDT)
- SSDCT
- Sleeper carrier
- MRA UK

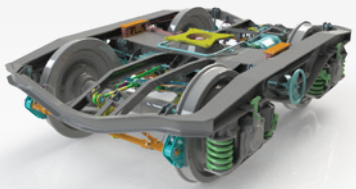

Bogies
- GB25RS with standard brake levers
- GB25RS with compact brake
- GB25RS with disc brake
- Y25Lsi(f)-DD1
- Y25Ls(s)d1-K
- Y25Ls(s)(d)i(f)1-K
- Y25Lsdi(f)-KC1
- Y33

Fundamentals of our quality policy

Continuously enhancing quality is one of Greenbrier Europe's most important strategic goals. We constantly aim to satisfy and exceed the high standards of our international customers.

In order to achieve this objective, we draw on our own expert staff dedicated exclusively to quality assurance. The Greenbrier Europe Quality Management System has naturally been certified in accordance with ISO 9001:2015, EN 14025, EN ISO 3834-2 and EN 15085. This is a field where Greenbrier Europe works together with Notified Body.

To fulfil our customers' demands, Greenbrier Europe has implemented, develops and continuously improves its Management System based on the process identification, interaction between processes and control with KPI's (Key Performance Indicators) analysis according to the Quality Business Plan.

ISO certified quality

Aims of our quality strategy

- Improving quality in all segments
- Further training of employees
- Achieving performance goals
- Customer satisfaction

Greenbrier Europe | Locations

Five high-performance production facilities

Two repair and maintenance workshops

Greenbrier Europe has five high performance production facilities and two repair and maintenance workshops for freight wagons and bogies in Romania, Poland, and Turkey.

Greenbrier Europe has successfully ramped up its manufacturing capability through the continuous development, technical improvement and modernisation of its production lines.



Intermodal wagons | Tank wagons | Flat wagons | Steel product wagons | Car carrier

Greenbrier Europe

AstraRail / Romania



Arad

Arad is the seat of Astra Rail Industries' headquarters. Bogies and freight wagons are produced on a covered area of 150,000 square meters.



Caracal

Production, maintenance and refurbishment of freight wagons and bogies on a covered area of 114,000 square meters.



Drobeta-Turnu Severin

Production, maintenance and repair of freight wagons on a surface area of 93,000 square meters. This is where production began more than 140 years ago.

Wagony Świdnica / Poland



Świdnica

Swidnica is the seat of Wagony Swidnica's headquarters. The facility has a long-standing experience in developing, manufacturing and servicing many types of freight wagons and innovative bogies.



Oława

Geographically close to important rail lines in Poland and with proven 70 years' experience in repairs, revisions, complex overhauls and refurbishment projects.



Tarnobrzeg

Based in the southeastern part of Poland, the service and repair workshop is the partner of choice for rail-freight operators acting in the eastern Poland.

Greenbrier Vagon / Turkey



Adana

The facility located in Adana produces new freight wagons and parts. It also provides services of repair and maintenance.

Engineering Group | Three prestigious engineering offices

Enginering Departments of Astra Rail Industries S.A., Wagony Swidnica Sp.zo.o and Astra Rail Project s.r.o.

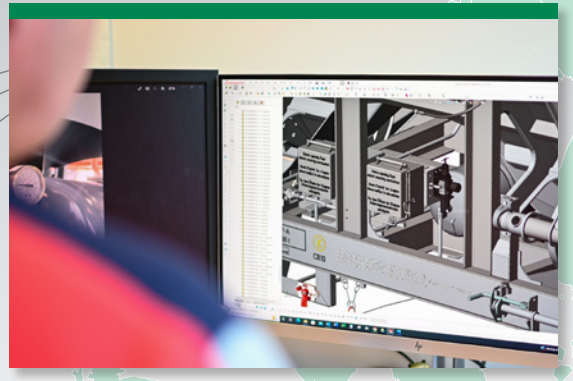

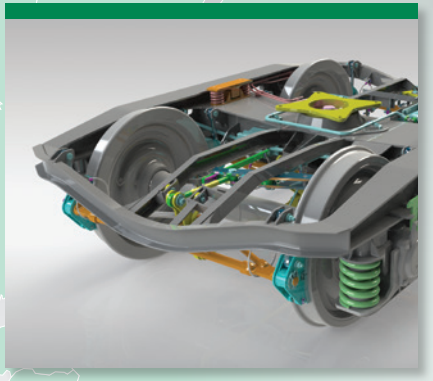

Testing

Design

Development

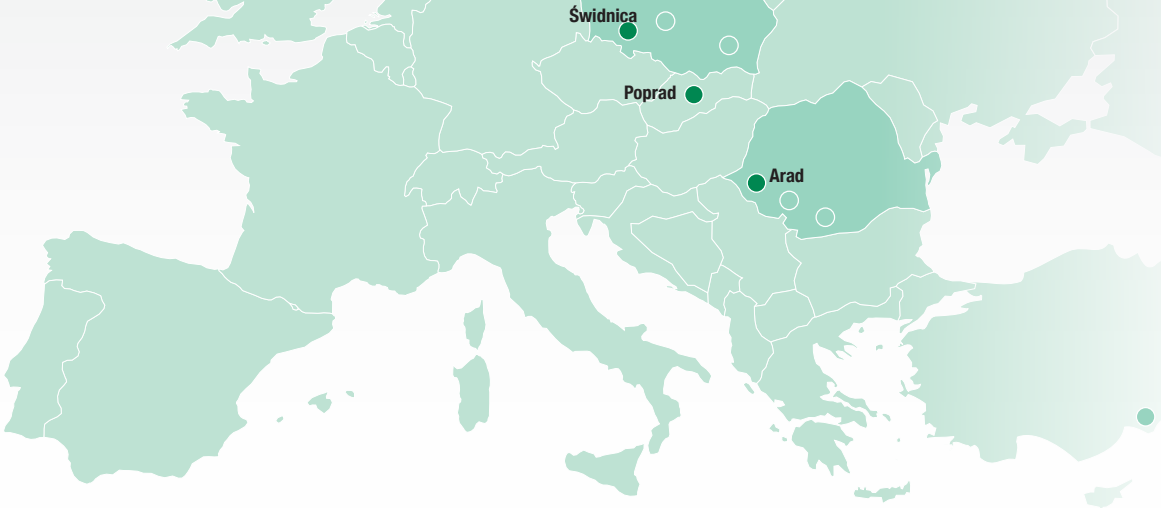

The Greenbrier Europe Engineering Group consists of three prestigious engineering offices and a testing laboratory: the engineering department of Astra Rail Industries S.A., based in Arad / Romania, Astra Rail Project based in Poprad / Slovakia, the engineering department of Wagony Świdnica, based in Świdnica / Poland, and ICPV testing laboratory, based in Arad, Romania.

The Greenbrier Europe Engineering Group is one of the biggest in our sector of rail freight business and it is specialized in the design, development and testing of rolling stock and bogies. Astra Rail Project contributes with more than 20 years of experience, the engineering department located in Romania contributes with more than 40 years of experience, the engineering department located in Poland, with more than 65 years of experience, and the testing laboratory contributes with more than 50 years of experience.

Intermodal wagons | Tank wagons | Flat wagons | Steel product wagons | Car carrier

In-house test facility | Arad

Part of the ICPV Development Centre







Part of the ICPV Development Centre is a test facility with a tradition of about 40 years, accredited in accordance with EN 17025. The ICPV Lab is equipped with test benches and rigs for testing dynamic impact and static strength, kinematics of wagon, a test rig for safety against derailment in curves and a brake test stand. Several tests are performed on rail track, using the specially equipped wagon lab. Testing rigs for components are as well part of laboratory infrastructure.

All wagon components relevant for safety are tested in this facility which applies the standards set by the TSI (Technical Specification for Interoperability), UIC (International Union of Railways) and specific standards (EN or National Standards)

In-house test facility

- Wheelsets, wheel bearings, brakes
- Suspension springs / spring holder
- Draw gear, buffer gear
- Underframe / bogie frame
- Wagon bodies, tanks
- Freight wagons and tank wagons

Freight wagon services | Maintaining, repairing and refurbishment

For Greeebrier Europe service means maintaining, repairing of freight wagons and bogies along with full repairs and refurbishment.

Repair & maintenance

- Underframe inspection and scheduled work on freight wagons
- Brake testing
- Bogie restoration
- Pressure and leakage testing of hazardous substances tank wagons
- Repair of accident damage
- Welding and forging
- Valve reconditioning
- Insulation
- Small batch production of flanges, tube and pipe fittings, connecting pieces etc.
- Enamel coating repair
- Bogie measurement
- Environmentally compatible cleaning of petroleum, chemicals, pressurized gas and dry bulk wagon

…

Retrofitting

- Conversion of bogies to the track gauge specific to the country
- Retrofitting of bogies
- Wheelset reconditioning
- Coating of tank wagons
- Surface treatment inside (glass bead blasting, standard blasting, pickling and passivation)
- Exterior and interior painting

…

Parts & components

- Running gear and bogie parts
- Draw and buffer gear parts
- Replacement parts for compressed air brakes and handbrakes
- Wagon add-on components
- Accessories for tanks and compressed gas tanks
- Heating systems
- Parts for platforms and ladders
- Signs and lettering
- Superstructure and signaling technology
- Forged parts
- Other components

…



Intermodal wagons | Tank wagons | Flat wagons | Steel product wagons | Car carrier





Repair and maintenance in Olawa and Tarnobrzeg

Greenbrier Europe's customers can rely on us long after their freight wagon or bogie has been delivered. We view expert inspection at defined intervals and repair as an important mainstay and guarantee of long-term customer satisfaction. Our Oława and Tarnobrzeg workshops are specialized in this field. Greenbrier Europe's repair services have been certified under VPI.

Retrofitting

The service life of Greenbrier Europe freight wagons is virtually unlimited. Older freight wagons do not therefore necessarily belong on the scrap heap. In many cases, retrofitting will bring them in line with the latest standards, which is why this is also a service offered as part of Greenbrier Europe's portfolio.

Parts and components in Caracal

Alongside complete freight wagons, we also supply relevant parts and components. Our Caracal facility offers a comprehensive portfolio of premium welded and cast parts right through to complete finished components for freight wagons. Our specialists will be happy to help you order the right parts for your particular replacement needs.



Contents | product catalogue

Wagons and bodies

Intermodal wagons



Sgnss 60´	12
Sggrss 80´	14
Sggnss 80´	16
Sggmrss 90´	18
Sdggmrss	20
Sffggmrrss	22
FFA-G 2 x 40'	24
FLA 2 x 40´	26
FKA 2 x 50´	28
FEA 60´	30
FEA 2 x 60´	32

Tank wagons



Zags 53 m³	34
Zacens 73 m³	36
Zaens 73 m³	38
Zacens 79 m³	40
Za(c)ns 88 m³	42
Zacns 98 m³	44
102 m³-Z08D	46
Zags 103 m³	48
Zags 106 m³	50
Zags 113 m³	52
Zags 117 m³	54
Zags 123 m³	56

Flat wagons



Rijmmns 660	58

Steel product wagons



Shimmns S10B	60
Shimmns S12A	62
Shimmns ttu 728	64
Shimmns	66
Smmnps slab wagon	68
Sfhimmns	70
Shmmnss	72

Car carriers



Laaers L04A	74
Laadrs	76
Laaers L02A	78
Laadgrs L04A	80
Laaers L07A	82
Laaers L08A	84
Laads L09A	86

Box wagons



JNA UK 42.9 m³	88
JNA 60 m³	90
Eamnos 57 m³-E06A & E06B	92
Eamnos 72 m³-E04E	94
Eanos 82.5 m³	96

Covered wagons



Rils-y 653	98
Hbbillns	100
Habbii(ll)ns 352	102
Habbii(ll)ns (Habbiins)-H01A	104

Hopper wagons



Tanoos 123 m³	106
Facnps 48 m³-F11A	108
Faccns 49 m³	110
Fanpps 55 m³	112
Falns 184 77 m³	114
Falns 85 m³	116
Falns 181 86.6 m³	118
Falns 87 m³	120
Tanpps 55 m³-T05A	122
Tanoos 78 m³-T03A	124
Tadns 82 m³	126
Tagnoos 898 90 m³	128
Tagnpps 95 m³	130
Tagnpps 95 m³	132
Tagnpps 102 m³	134
Tagnpps 130 m³	136

Special wagons



Faccns (Xans)	138
Faeeprrs (SSDT)	140
SSDCT	142
Sleeper carrier	144
MRA UK	146

Bogies

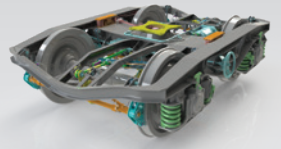

GB25RS with standard brake levers	148
GB25RS with compact brake	150
GB25RS with disc brake	152
Y25Lsi(f)-DD1	154
Y25Ls(s)d1-K	156
Y25Ls(s)(d)i(f)1-K	158
Y25Lsdi(f)-KC1	160
Y33	162

Sgnss 60´ | 4-axle articulated intermodal wagon

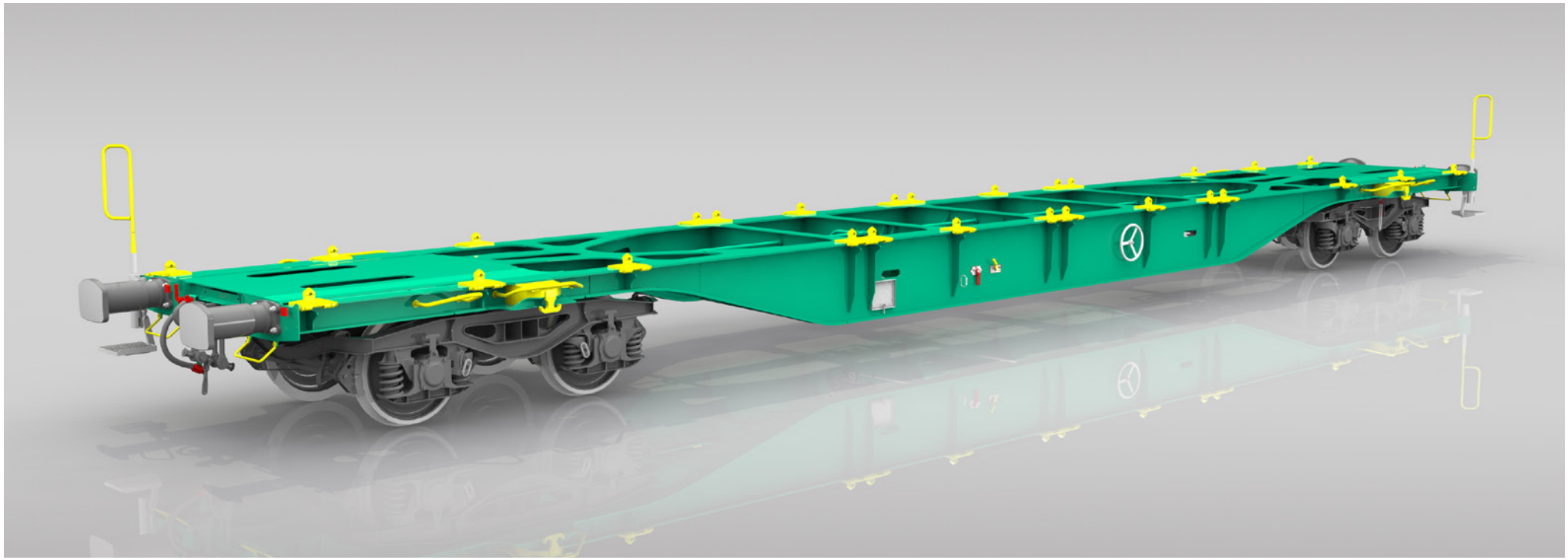

Features

- This single platform wagon on 2 bogies belongs to the new design family of intermodal wagons.
- The wagon is produced in different configurations, so it is suitable for carrying of containers of various lengths (20', 30', 40') and swap bodies in intermodal transport.
- The wagon design meets the requirements of TSI, EN, UIC standards and has TEN GE marking for traffic operation.
- The wagon meets the IRS 50596-6 and it bears the "C" marking.
- Underframe complies with EN 12663-2 and UIC 530-1 provisions for mounting the Automatic Coupler.

Capabilities

- Containers of class 1 – 1C…, 1B…, 1A… according to ISO 668.
- Symmetrical and asymmetrical swap bodies according to IRS 50592.
- Specialized superstructures with adequate parameters equipped with the appropriate ISO corners.

Loading possibilities are in accordance with the loading diagram.

Sgnss 60´ | 4-axle articulated intermodal wagon

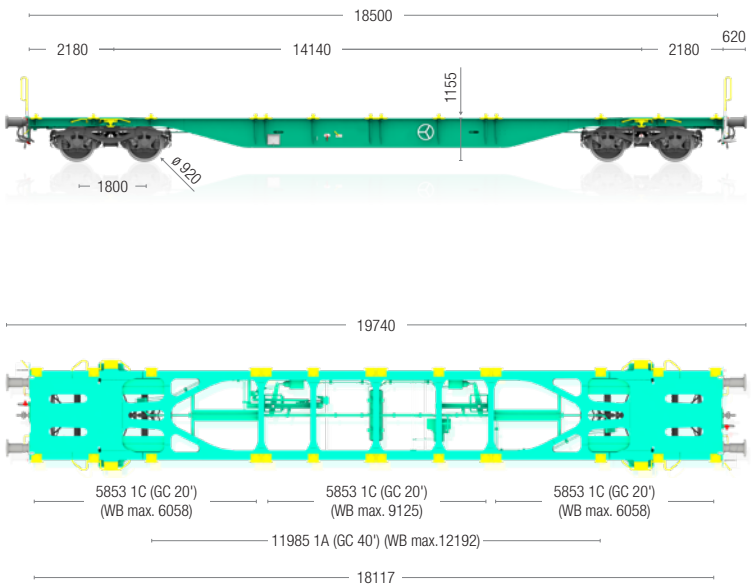

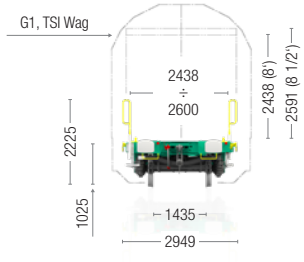

General parameters

Axle load	22.5 t / axle
Track gauge	1,435 mm
Loading gauge	G1+GI1 – TSI
Brake regime	“S” or “SS”
Brake type	GP-A (K)
Max. speed, SS regime (up to 20 t/axle)	120 km/h
Max. speed, S regime (up to 14,5 t/axle)	120 km/h
Max. speed, S/SS regime (up to 22,5 t/axle)	100 km/h
Climate condition	T1 – TSI
R_{min}	75.0 m
Length over buffers	19,740 mm
Tare weight	~18.0 t
Payload	~72.0 t
Loading height	1,155 mm
Bogie type	Y25Ls(s)1-KV

The descriptions provided herein are for general information purposes only.

Sggrss 80´ | 6-axle articulated intermodal wagon



Features

- This two platformed articulated intermodal wagon on 3 bogies is suitable for carrying 20', 30' and 40' containers as well as swap bodies in an efficient manner.
- The wagon design meets the requirements of TSI, EN, UIC standards and has TEN GE marking for traffic operation.
- The UIC 596-6 is fulfilled by the wagon that has also “C” marking on; a payload of 108.8 t on both platforms is possible.

Capabilities

Containers according to UIC 592 (ISO 668) and swap bodies according to UIC 592, in compliance with UIC 596-6:

- Series 1 freight containers – 1CX, 1C, 1CC, 1AX, 1A, 1AA; + 1BX, 1B, 1BB[1][2][3]
- Symmetrical swap bodies – (20), 40, + (30)[1]; + (21), 22, 23, 24, (26), (29)[2]; + (31)[3]
- Asymmetrical swap bodies – NA + (81), 82, (84), (85), (86)[1]; + (60)[2][3]

Loading possibilities are in accordance with loading diagram.

Sggrss 80´ | 6-axle articulated intermodal wagon

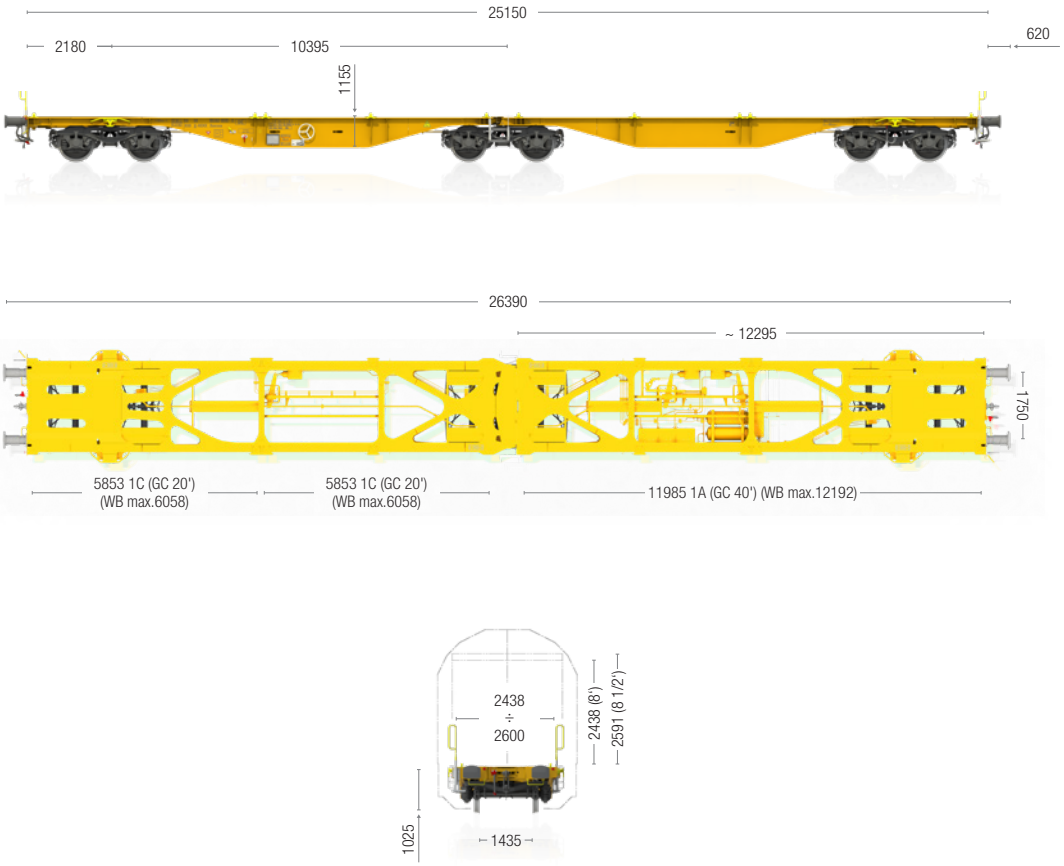

General parameters

Axle load	22.5 t / axle
Track gauge	1,435 mm
Loading gauge	G1-TSI
Brake regime	“SS”
Brake type	GP-A (K)
Max. speed at 135.0 t	100 km/h
Max. speed at 120.0 t	120 km/h
Climate condition	T1
R_{min} (single wagon)	75.0 m
Length over buffers	26,390 mm
Tare weight	~ 26.2 t
Payload	~ 108.8 t
Loading height	1,155 mm
Bogie type	Y25Lss1-K
Number of ct. spigots	16; 20[1]; 24[2]; 32[3]

The descriptions provided herein are for general information purposes only.

Sggnss 80´ | 4-axle intermodal wagon



Features

- This intermodal wagon is suitable for carrying containers and swap bodies of various lengths (20´, 30´, 40´) classified in ISO 668.
- The wagon design meets the requirements of TSI, EN, UIC standards and has TEN GE marking for traffic operation.

Capabilities

- Containers according to ISO 668:
  - containers of class 1 – 1E, 1C, 1B, 1A.
- Swap bodies according to UIC 592, in compliance with UIC 596-6:
  - Symmetrical swap bodies – (20), (21), 22, 23, 24, (26), (29), (30), (31), 40, 42, (44), (45).
  - Asymmetrical swap bodies – (60), (81), 82, (84), (85), (86), (91), (94), (95), 96, (97), (98).
- Loading possibilities are in accordance with loading diagram.

Sggnss 80´ | 4-axle intermodal wagon

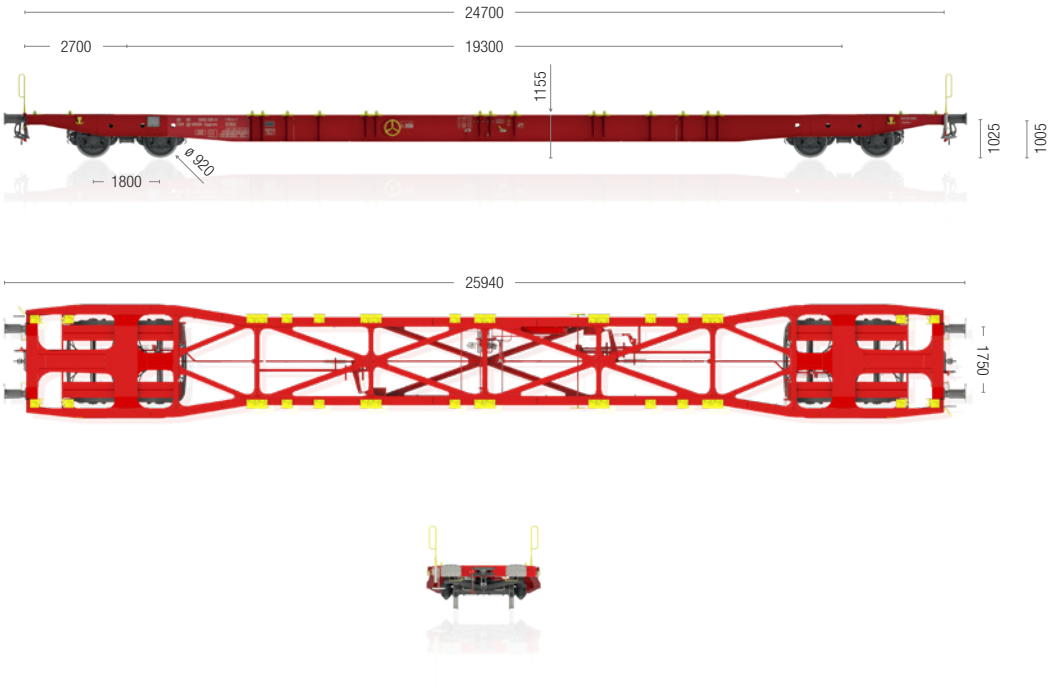

General parameters

Axle load	22.5 t
Tare weight	21.5 t
Track gauge	1,435 mm
Running gauge	G1-TSI
Brake regime	“SS”
Brake type	GP-A (K)
Max. speed (up to 14.5 t / axle)	120 km/h
Max. speed (over 14.5 t / axle)	100 km/h
Climate conditions	T1-TSI
R_{min} (single wagon)	75.0 m
R_{min} (wagons in train)	150.0 m
Length over buffers	25,940 mm
Underframe length	24,700 mm
Loading height	1,155 mm
Bogie type	Y25Ls(s)1-K
Wheel diameter	920 mm
Number of ct. spigots	34

The descriptions provided herein are for general information purposes only.

Sggmrss 90´ | 6-axle articulated intermodal wagon

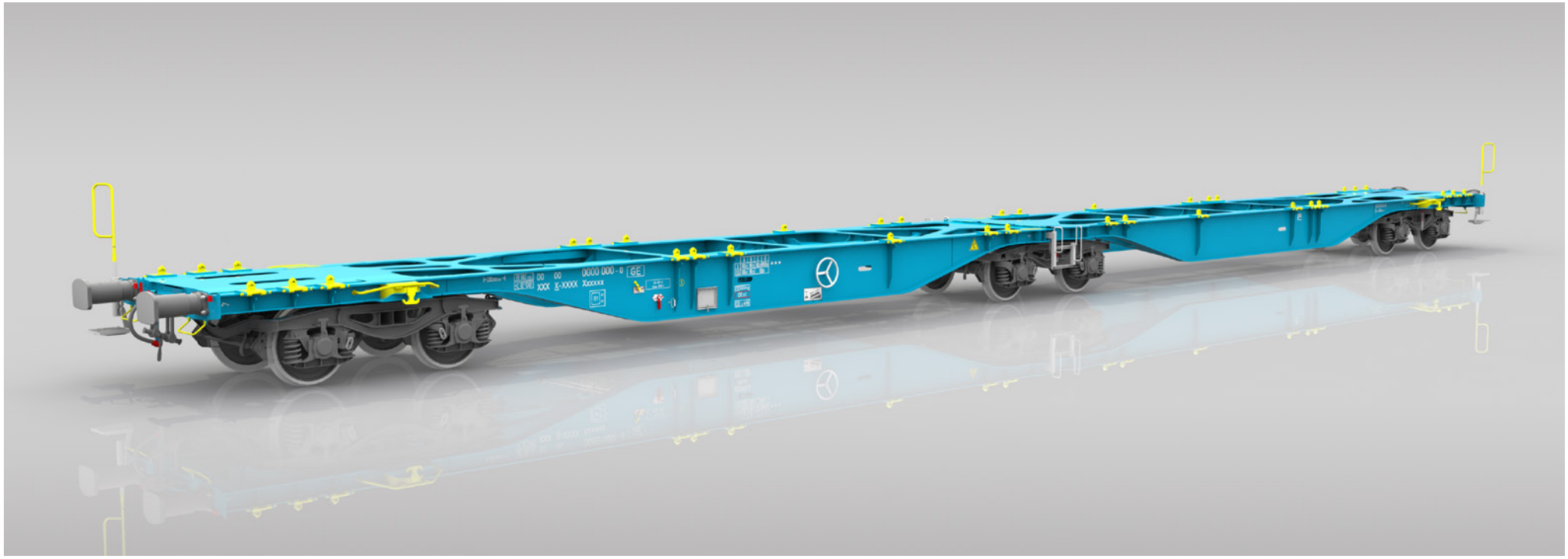

Features

- This two platformed articulated intermodal wagon on 3 bogies is suitable for carrying 20´, 30´, 40´ and 45´ containers as well as swap bodies in an efficient manner.
- The wagon design meets the requirements of TSI, EN, UIC standards and has TEN GE marking for traffic operation.
- The UIC 596-6 is fulfilled by the wagon that has also “C” marking on; a payload of 107.7 t on both platforms is possible.

Capabilities

Containers according to UIC 592 (ISO 668) and swap bodies according to UIC 592, in compliance with UIC 596-6:

- Series 1 freight containers – 1CX, 1C, 1CC, 1BX, 1B, 1BB, 1AX, 1A, 1AA, 1EE
- Symmetrical swap bodies – (20), (21), 22, 23, 24, (26), (30), (31), 40, 42, (44), (45)
- Asymmetrical swap bodies – (60), (81), 82, (84), (85), (86), (91), (94), 96

Loading possibilities are in accordance with loading diagram.

Sggmrss 90´ | 6-axle articulated intermodal wagon

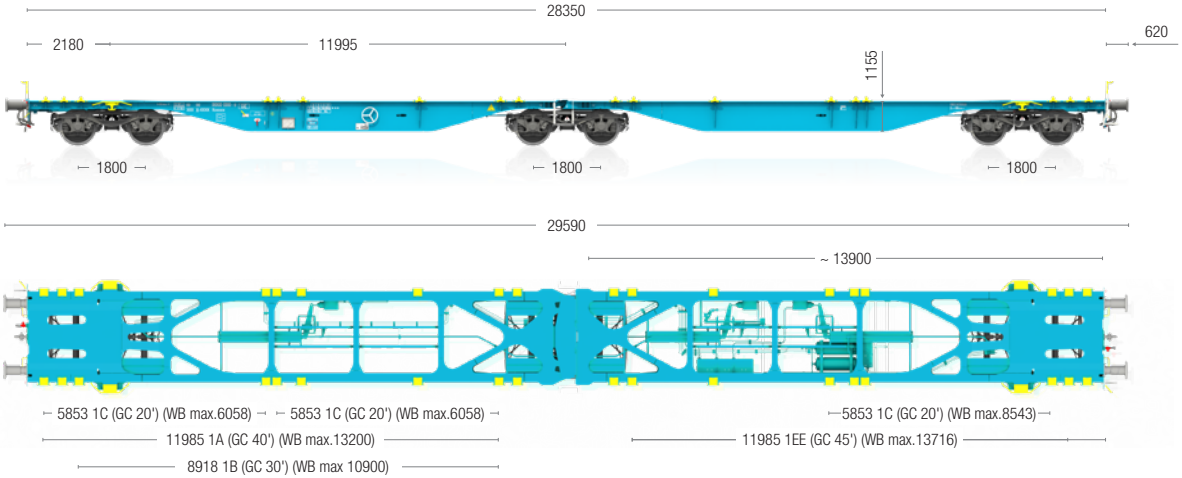

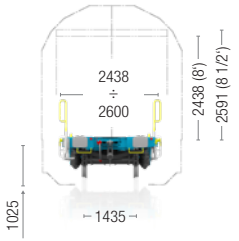

General parameters

Axle load	22.5 t / axle
Track gauge	1,435 mm
Loading gauge	G1-TSI
Brake regime	“SS”
Brake type	GP-A (K)
Max. speed at 135.0 t	100 km/h
Max. speed at 120.0 t	120 km/h
Climate condition	T1
R_{min} (single wagon)	75.0 m
Length over buffers	29,590 mm
Tare weight	~ 27.3 t
Payload	~ 107.7 t
Loading height	1,155 mm
Bogie type	Y25Lss1-K
Number of ct. spigots	24

The descriptions provided herein are for general information purposes only.

Sdggmrss | 6-axle articulated intermodal wagon

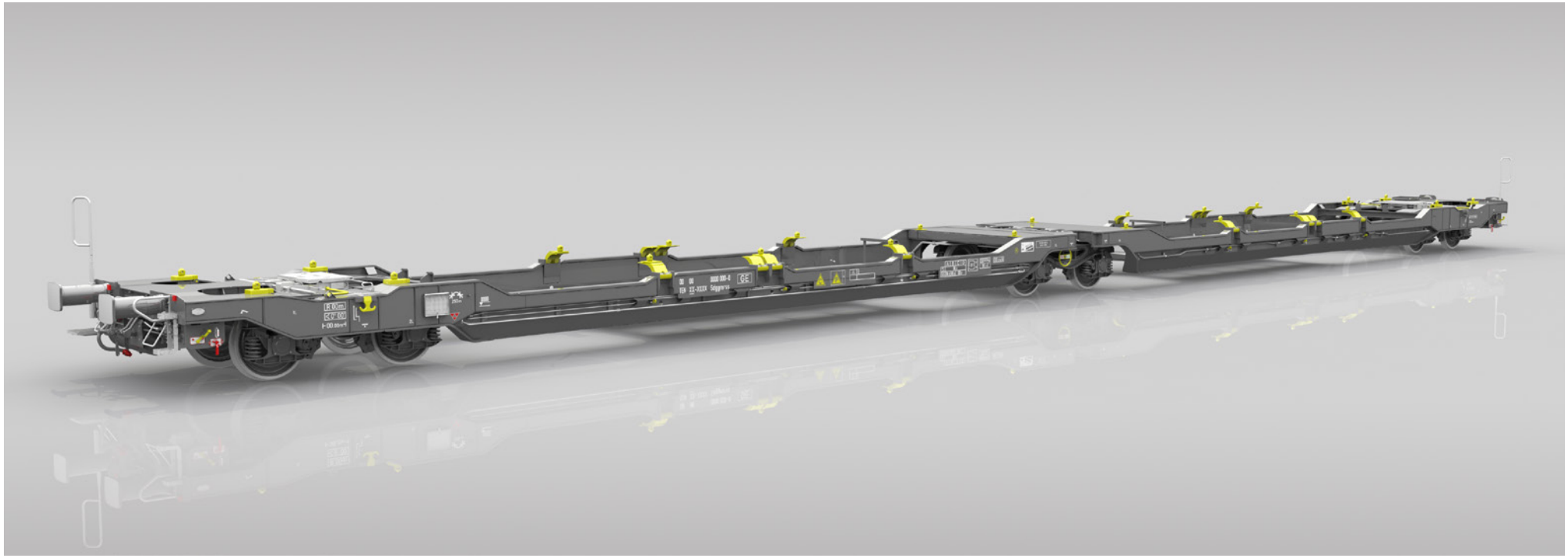

Features

- This two platformed articulated wagon on 3 bogies belongs to the new design family of intermodal wagons.
- The wagon is suitable for carrying of semitrailers with an envelope according to compatibility code “e” as per IRS 50596-5
- The wagon is also suitable for carrying the containers of various lengths (20’, 30’, 40’ and 45’) in accordance with ISO 668 and swap bodies in accordance with UIC 592 and IRS 50596-6.
- The wagon design meets the requirements of TSI, EN, UIC standards and has TEN GE marking for traffic operation.
- The wagon meets the IRS 50596-6 and it bears the “C” and “P” marking with envelope compatibility code “e”.
- Underframe comply with EN 12663-2.

Capabilities

- Containers of class 1 – 1C, 1CC, 1CX, 1B, 1BB, 1BX, 1A, 1AA, 1AX, 1EE according to ISO 668.
- Symmetrical and asymmetrical swap bodies according to IRS 50592.
- Semitrailers with an envelope according to compatibility code “e” as per IRS 50596-5

Loading possibilities are in accordance with loading diagram.

Sdggmrss | 6-axle articulated intermodal wagon

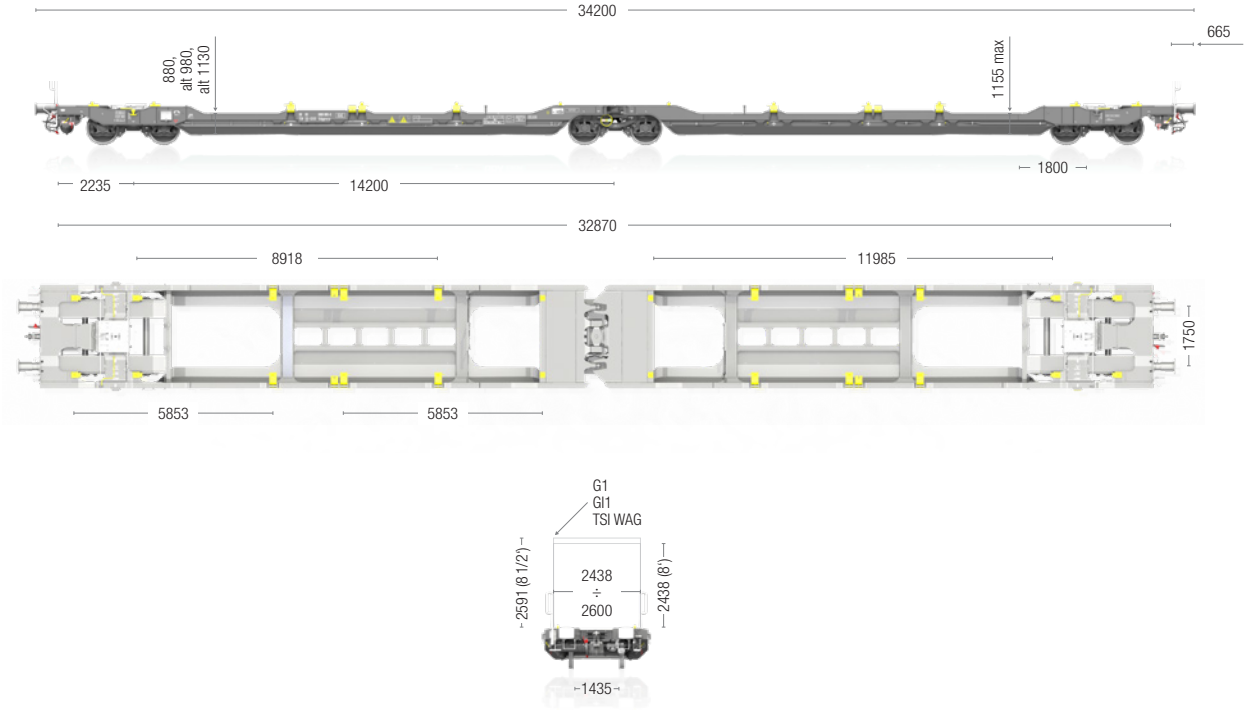

General parameters

Axle load	22.5 t
Track gauge	1.435 mm
Running gauge	G1+GI1 - TSI WAG
Brake regime	“S” or “SS”
Brake type	GP-A (K)
Max. speed, SS regime (up to 20 t/axle)	120 km/h
Max. speed, S regime (up to 14,5 t/axle)	120 km/h
Max. speed, S/SS regime (up to 22,5 t/axle)	100 km/h
Climate conditions	T1, T3 - TSI WAG
Rmin (single wagon)	75.0 m
Length over buffers	34,200 mm
Tare weight	~ 35.0 t
Payload	~ 100.0 t
Loading height of containers	1,155 mm
Bogie type	Y25Ls(s)di(f)-KC1(V)

The descriptions provided herein are for general information purposes only.

Sffggmrrss | 8-axle short coupled intermodal wagon (Megafret)

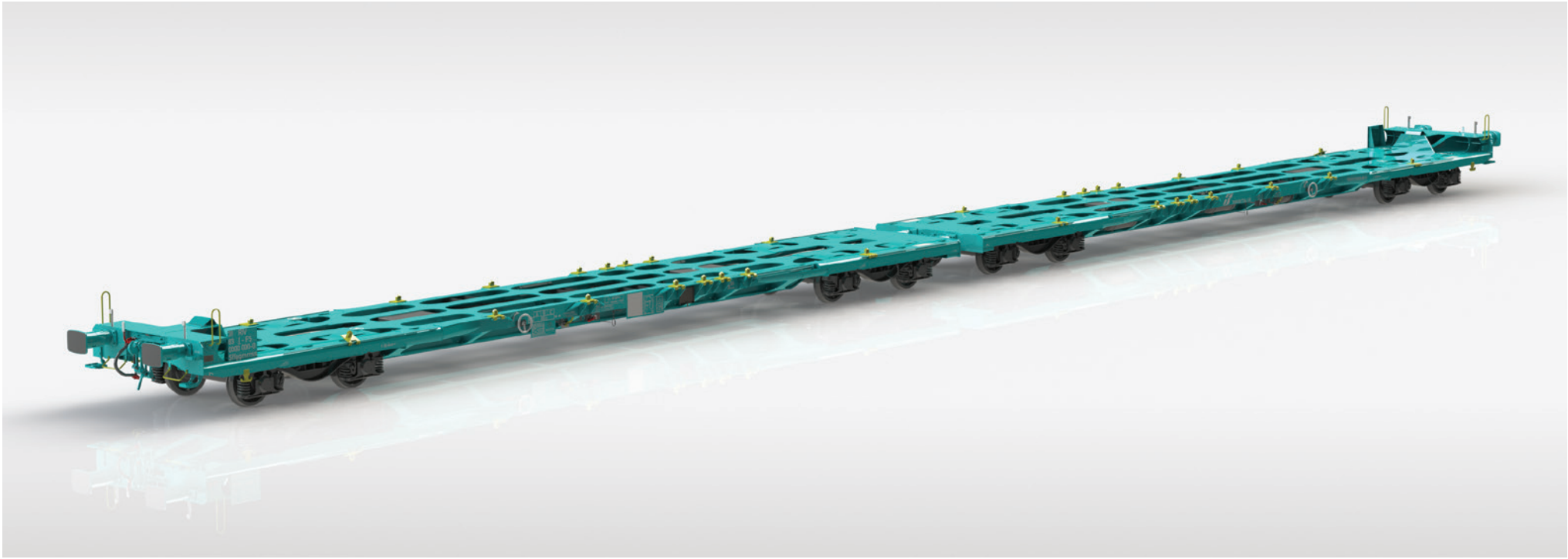

Features

- This low two platformed intermodal wagon on 4 bogies (8 axles) is suitable for carrying 20‘ , 30‘, 40‘ containers and swap bodies classified in UIC 592 in symmetrical and asymmetrical load configurations on the entire length.
- The total length of the wagon is optimized using a short coupling system between the 2 low platforms.
- The wagon design meets the requirements of EN, UIC standards and has GE marking for traffic operation.
- The UIC 596-6 is fulfilled by the wagon that has also “C” marking on; a payload of 89.0 t on both platforms is possible.

Capabilities

Containers according to UIC 592 (ISO 668) and swap bodies according to UIC 592, in compliance with UIC 596-6:

- Series 1 freight containers – 1CX, 1C, 1CC, 1BX, 1B, 1BB, 1AX, 1A, 1AA
- Symmetrical swap bodies – (20), (21), 22, 23, 24, (26), (30), (31), 40, 42, (44), (45)
- Asymmetrical swap bodies – (60), (81), 82, (84), (85), (86), (91), (94), 96

Loading possibilities are in accordance with loading diagram.

Sffggmrrss | 8-axle short coupled intermodal wagon (Megafret)

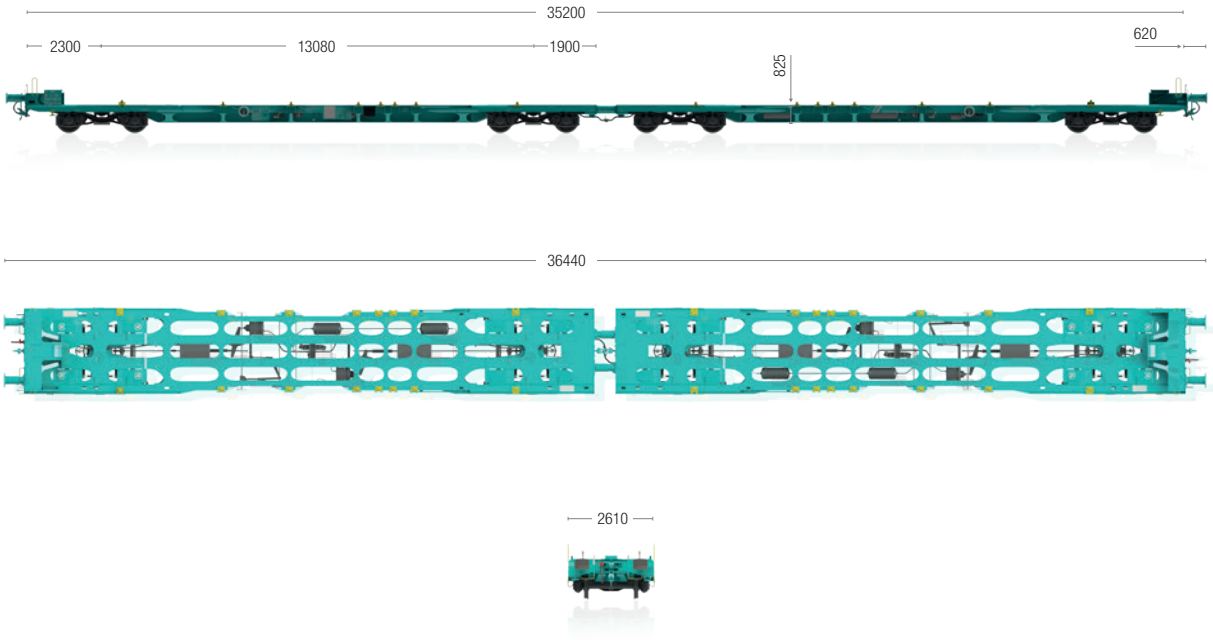

General parameters

Axle load	16.0 t / axle
Track gauge	1,435 mm
Loading gauge	G1-TSI / W6a GB
Brake regime	“SS”
Brake type	GP-A (K)
Max. speed at 135.0 t	100 km/h
Max. speed at 120.0 t	120 km/h
Climate condition	T1
R_{min} (single wagon)	75.0 m
Length over buffers	36,440 mm
Tare weight	~ 39.0 t
Payload	~ 89.0 t
Loading height	825 mm
Bogie type	Y33-K
Wheel diameter	730 mm
Bogie wheel base	2,000 mm
Coupling inner	Permanent
Number of ct. spigots	32

The descriptions provided herein are for general information purposes only.

FFA-G x 40´ | 8-axle UK container wagon

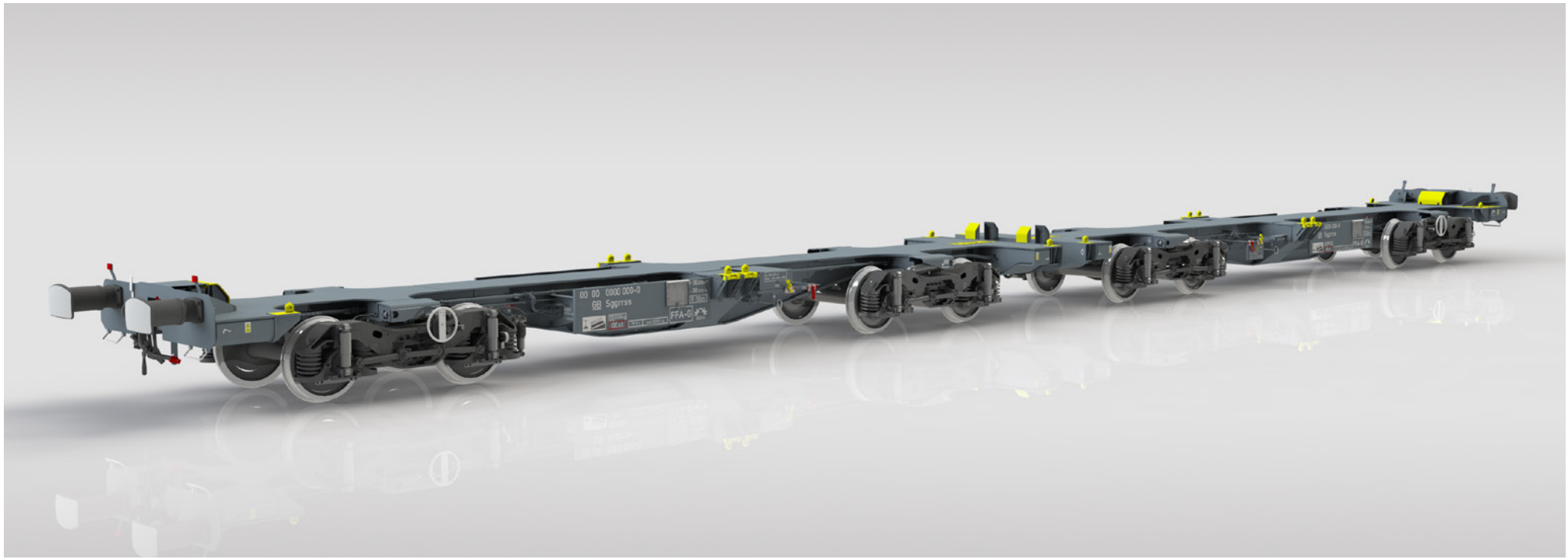

Features

- The short coupled wagon is designed for UK railway infrastructure.
- The intermodal twin wagon is suitable for carrying the containers of lengths of 20' and 40' classified in ISO 668. The wagon can transport the 9'6" high cube containers within W10 gauge.
- Two single platforms are joined together by the semi-permanent cushion bar able to be disconnected during maintenance.
- The wagon design meets the requirements of NTSNs, NTRs and ENs.

Capabilities

- Containers of class 1 – 1C... and 1A… according to ISO 668.

Loading possibilities are in accordance with the loading diagram.

FFA-G x 40´ | 8-axle UK container wagon

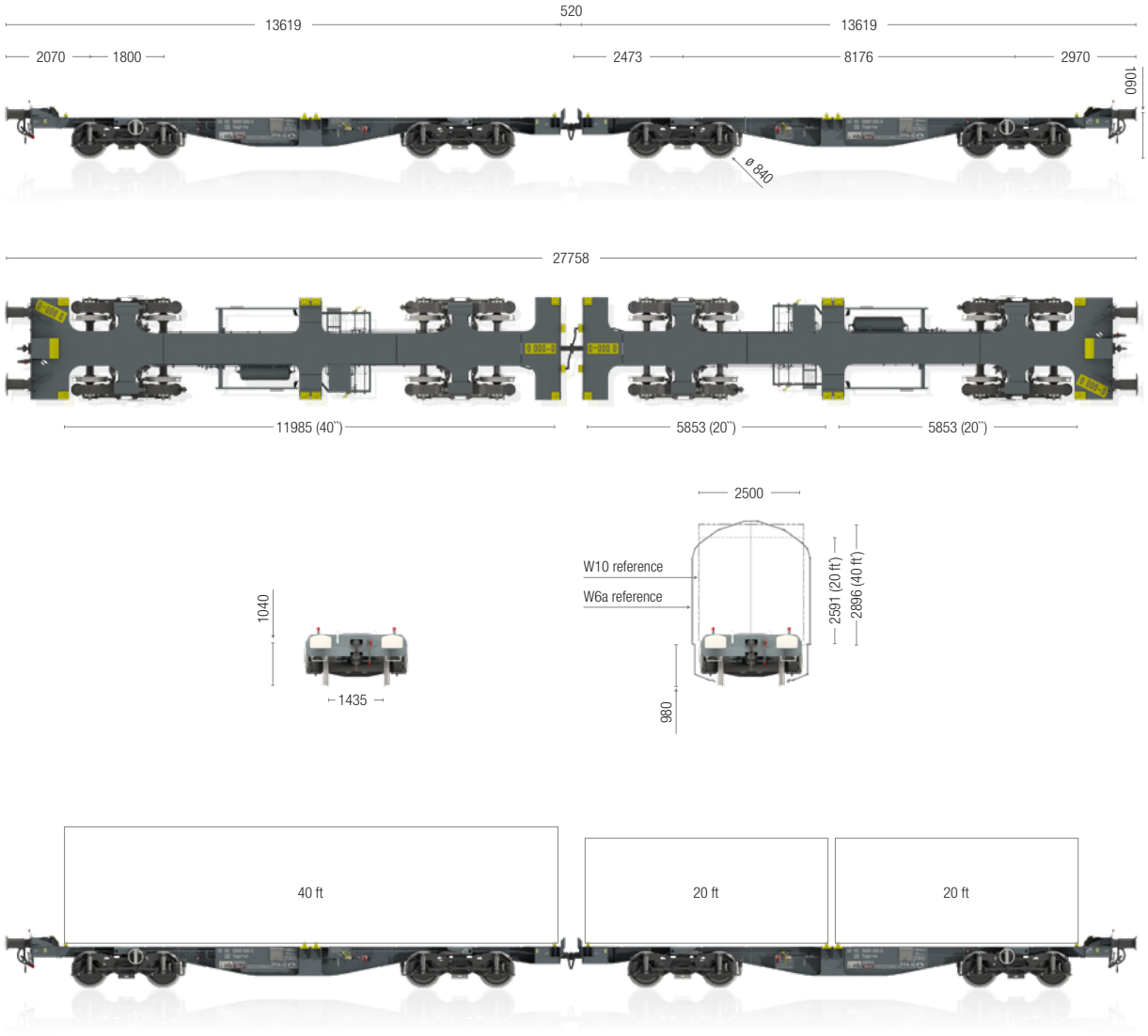

General parameters

Axle load	18.0 t / axle
Track gauge	1,435 mm
Running gauge	W6a
Brake regime	UK
Brake type	GP-A (K)
Max. speed	120 km/h (75 mph)
Climate condition	T1 - NTSN
R_{min}	75.0 m
Length over buffers	27,758 mm
Tare weight	36,9 t (2 x 18,45 t)
Underframe Length	12,999 mm
Loading height	~980 mm
Bogie type	TF20
Wheel diameter	840 mm
Bogie wheel base	1,800 mm

The information provided herein is for general information purposes only.

FLA 2 x 40´ | 8-axle UK container wagon (Lowliner)

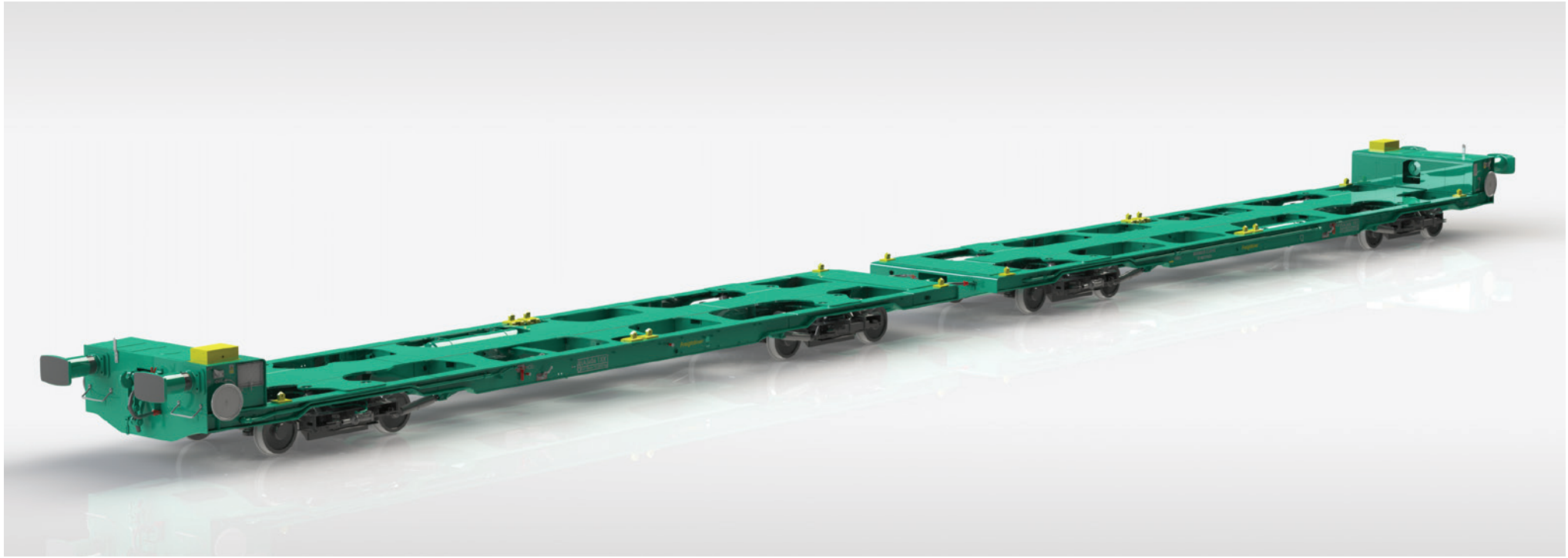

Features

- This wagon with 2 platforms is designed for transportation of 9´6˝ high 2500 mm wide containers within W8 and SB1-C gauge on a loading deck of 40´. Wagon platforms are connected by the tie rod.
- This is achieved through the use of the LTF13 bogie and ø540 mm wheels.
- This wagon is designed according to EN, Group Standards for UK traffic operation.

Capabilities

- 20´ and 40´ containers 2500 mm wide and 9´6˝ high according to UIC within W8 gauge.

Loading possibilities are in accordance with the loading diagram.

FLA 2 x 40´ | 8-axle UK container wagon (Lowliner)

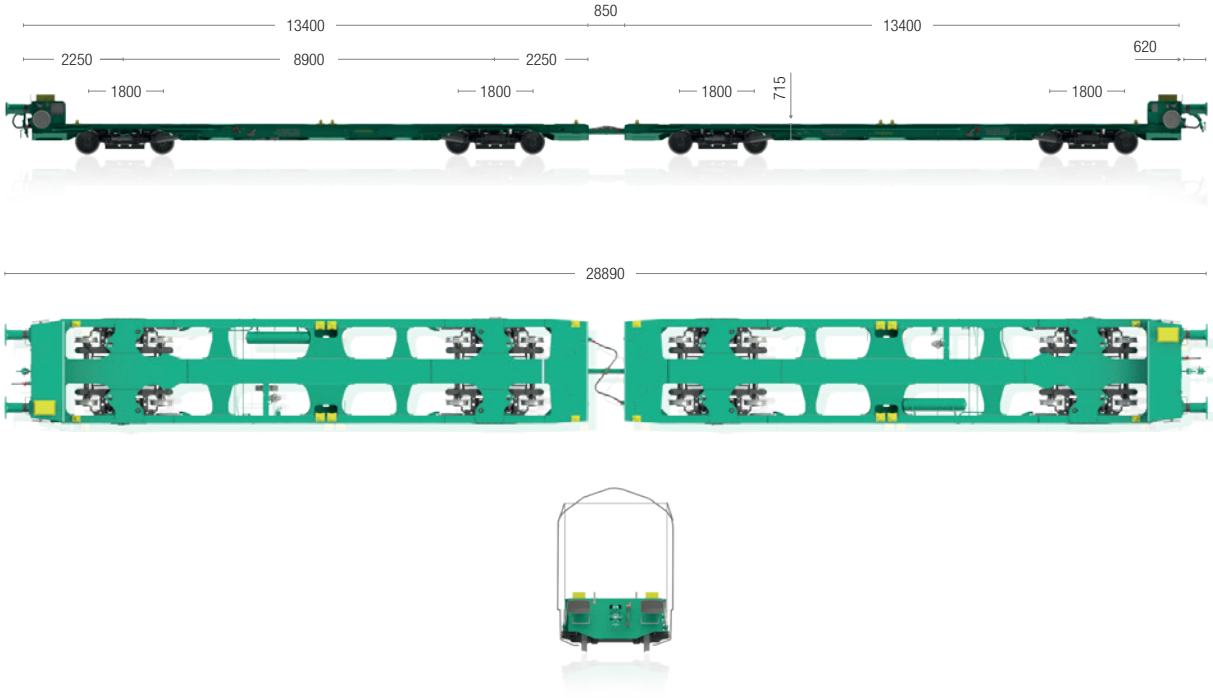

General parameters

Axle load	13.0 t / axle
Track gauge	1,435 mm
Loading gauge	W6a
Brake regime	UK
Brake type	GP-A (K)
Max. speed	75 mph (120 km/h)
Climate condition	T_{RIV}
R_{min} (coupled)	70.0 m
Length over buffers	28,890 mm
Tare weight	34.0 t
Payload	70.0 t
Loading height	715 mm
Bogie type	LTF13
Wheel diameter	540 mm
Bogie wheel base	1,800 mm

The information provided herein is for general information purposes only.

FKA 2 x 50´ | 8-axle container wagon (Megafret)



Features

- This wagon with 2 platforms is designed to carry any combination of containers up to its maximum load length of 50´ as specified in the table.
- Wagon platforms are connected by the tie rod.
- The wagon is designed and approved to run in the UK and Continental Europe according to EN and Group Standards.

Capabilities

Cargo type	Max. height	Max. width	Gauge
Containers			
2 x 20´, 1 x 20´, 1 x 30´, 1 x 40´, 1 x 45´, 1 x 20 & 1 x 30´	9´1½˝	2,500 mm	WB
2 x 20´, 1 x 20´, 1 x 30´, 1 x 40´, 1 x 45´, 1 x 20 & 1 x 30´	9´6˝	2,500 mm	SB1C

FKA 2 x 50´ | 8-axle container wagon (Megafret)

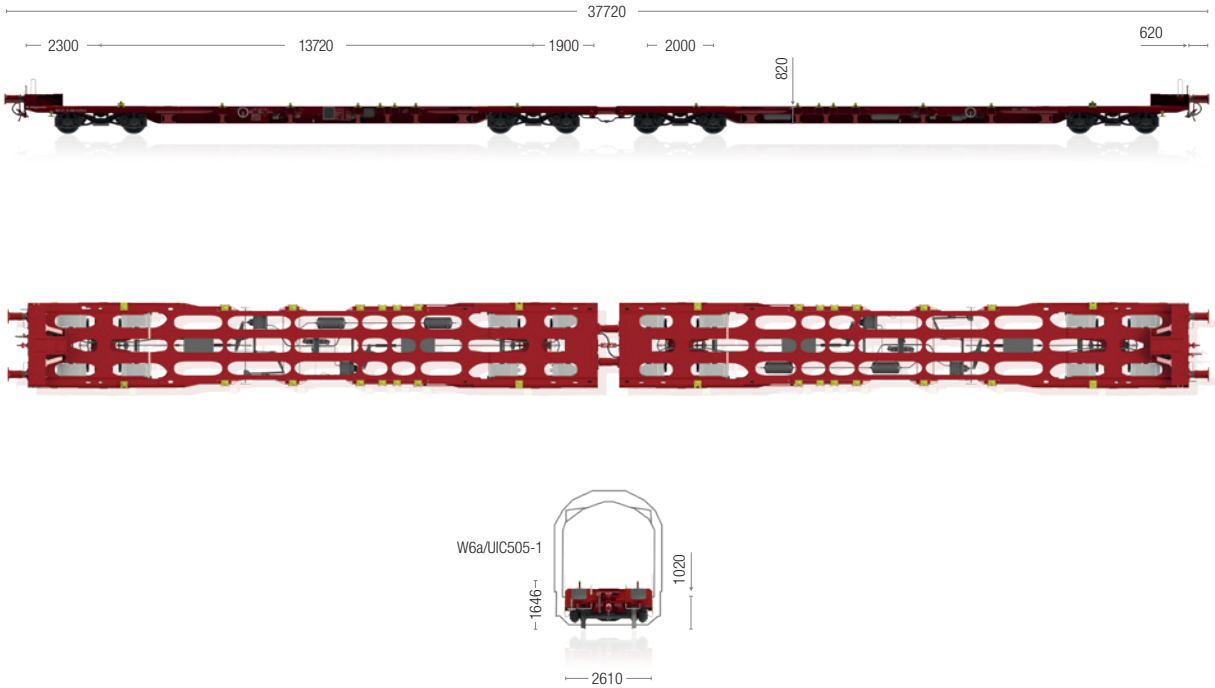

General parameters

Axle load	16.0 (17.0) t / axle
Track gauge	1,435 mm
Loading gauge	W6a / SB1C
Brake regime	UK
Brake type	GP-A (K)
Max. speed	120 km/h
Climate condition	T_{RIV}
R_{min} (single wagon)	70.0 m
Length over buffers	37,720 mm
Tare weight	~ 48.0 t
Payload	~ 88.0 t (UK), 80.0 t (UIC)
Loading Height	820 mm
Bogie type	Y33
Wheel diameter	730 mm
Bogie wheel base	2,000 mm

The information provided herein is for general information purposes only.

Cargo type	Max. height	Max. width	Gauge
Swap bodies			
1 x 13.6 m, 1 x 7.15 m, 1 x 7.82 m, 2 x 7.15 m, 2 x 7.82 m	S00	2,500 mm	W6a
1 x 13.6 m, 1 x 7.15 m, 1 x 7.82 m, 2 x 7.15 m, 2 x 7.82 m	S34	2,500 mm	W8
1 x 13.6 m, 1 x 7.15 m, 1 x 7.82 m, 2 x 7.15 m, 2 x 7.82 m	S44	2,500 mm	SB1C

FEA 60´ | 4-axle UK intermodal wagon

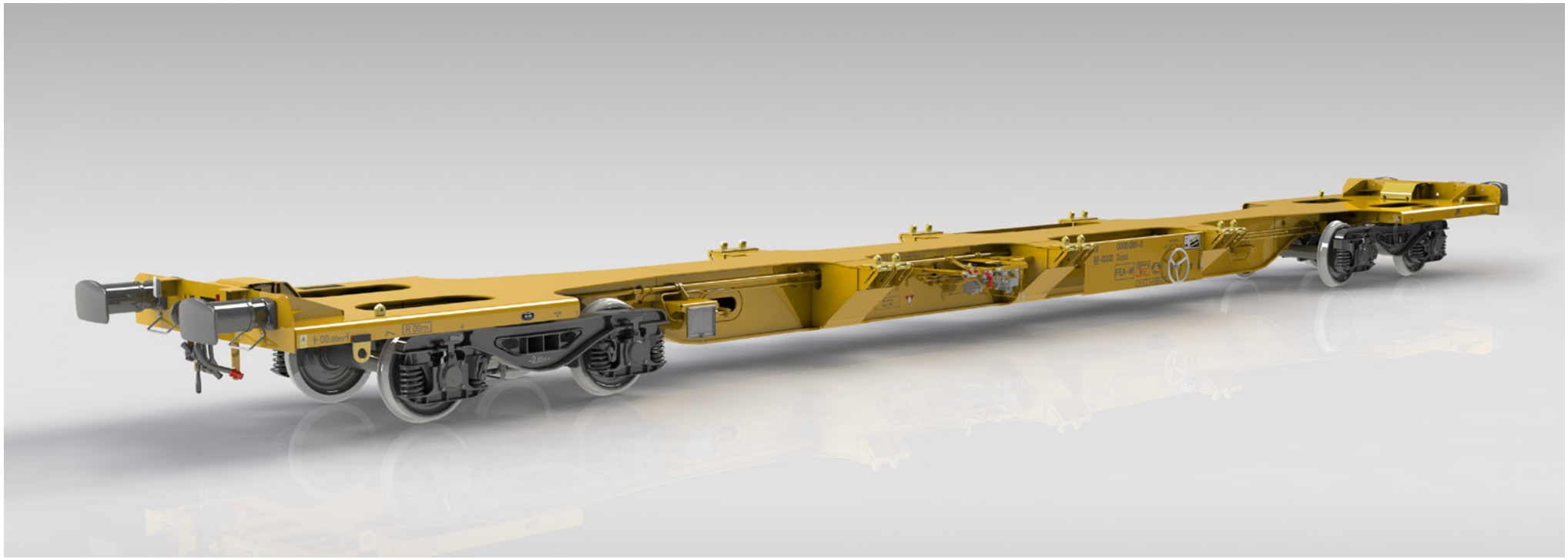

Features

- The wagon is designed for UK railway infrastructure.
- The intermodal wagon is suitable for carrying the containers and swap bodies of various lengths (20', 30', 40') classified in ISO 668. The wagon can transport the 9'6" high cube containers within W10 gauge.
- The wagon design meets the requirements of NTSNs, NTRs and ENs.

Capabilities

- Containers of class 1 – 1C..., 1B..., 1A… according to ISO 668.
- Specialized superstructures equipped with the appropriate ISO corners.

Loading possibilities are in accordance with the loading diagram.

FEA 60´ | 4-axle UK intermodal wagon

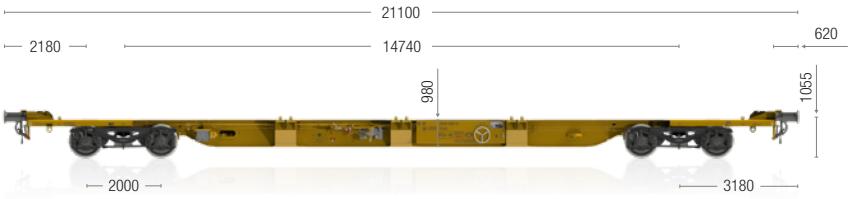

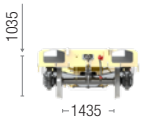

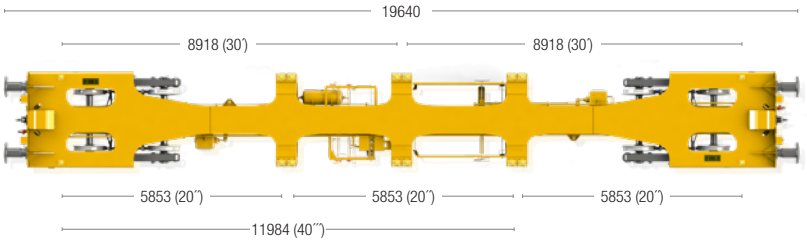

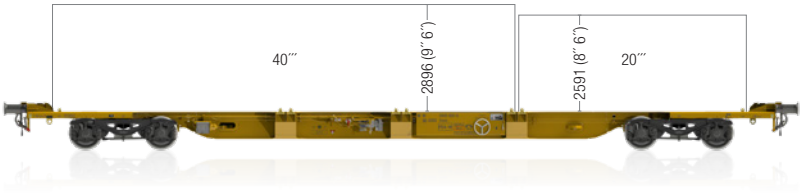

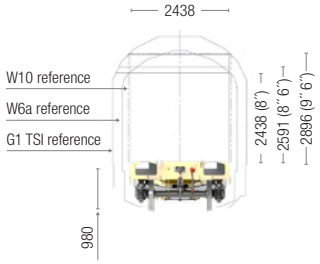

General parameters

Axle load	20.5 t / axle
Tare weight	20.7 t
Track gauge	1,435 mm
Running gauge	W6a
Brake regime	"UK"
Brake type	GP-A (K)
Max. speed	120 km/h (75 mph)
Climate condition	T1 - NTSN
R_{min}	75.0 m
Length over buffers	21,100 mm
Underframe length	19,860 mm
Loading height	980 mm
Bogie type	Y33 UK
Wheel diameter	840 mm
Bogie wheelbase	2,000 mm

The descriptions provided herein are for general information purposes only.

FEA 2 x 60´ | 8-axle UK container wagon



Features

- The wagon is designed for UK railway infrastructure.
- The intermodal twin wagon is suitable for carrying the containers and swap bodies of various lengths (20', 30', 40') classified in ISO 668. The wagon can transport the 9'6" high cube containers within W10 gauge.
- Two single platforms are joined together by the cushion bar.
- The wagon design meets the requirements of NTSNs, NTRs and ENs.

Capabilities

- Containers of class 1 – 1C..., 1B..., 1A… according to ISO 668.
- Specialized superstructures equipped with the appropriate ISO corners.

Loading possibilities are in accordance with the loading diagram.

FEA 2 x 60´ | 8-axle UK container wagon

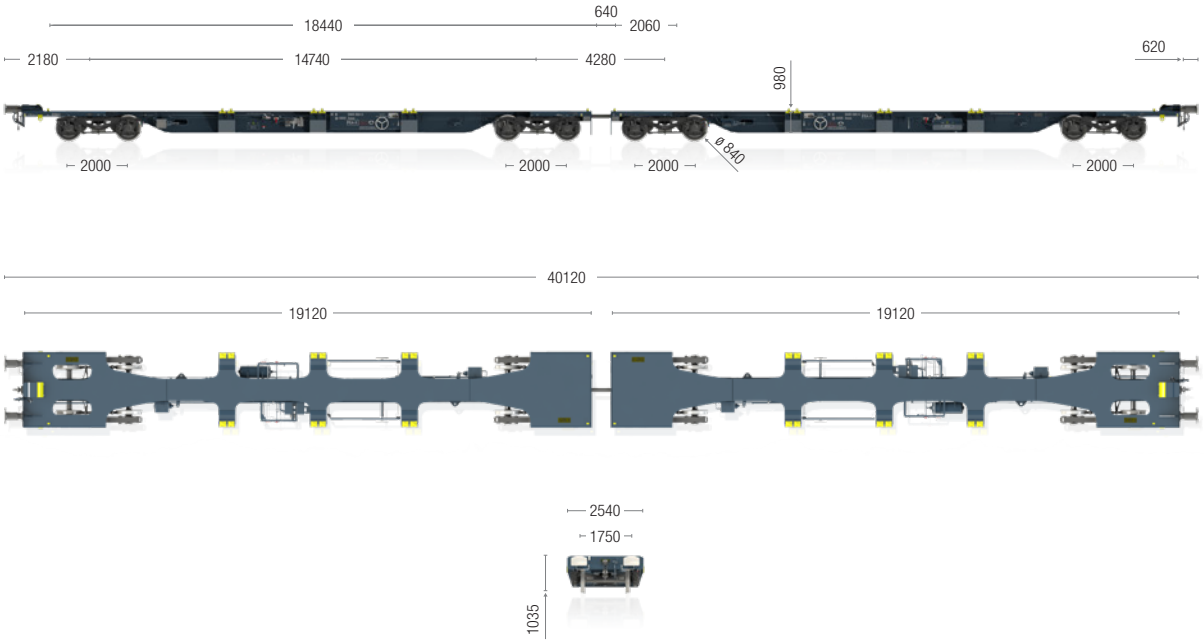

General parameters

Axle load	20.5 t / axle
Track gauge	1,435 mm
Running gauge	W6a
Brake regime	UK
Brake type	GP-A (K)
Max. speed	120 km/h (75 mph)
Climate condition	T1 - NTSN
R_{min}	75.0 m
Length over buffers	40,120 mm
Underframe length	19,120 mm
Tare weight	~ 41.6 t
Loading height	980 mm
Bogie type	Y33 UK
Wheel diameter	840 mm
Bogie wheel base	2,000 mm

The descriptions provided herein are for general information purposes only.

Zags 53 m³ | 4-axle tank wagon



Features

- The 4-axle tank wagon is designed for the transport of liquefied chlorine (and, or sulfur dioxide), the tank code is P22DH and a test pressure 22 bar.
- Tank has no openings below the surface of the liquid.
- The wagon is designed and built in accordance with the RID and TSI regulations and corresponding EN / UIC standards. The wagon meets required the Swiss requirements “Gemeinsame Erklärung II (GE II)“, 2016”. The wagon has TEN GE marking for traffic operation.
- Underframe is designed and equipped with protective shield at each end of the wagon in conformity with RID TE25 rules item d). Reinforced tank head in conformity with RID TE 25 rules item b).

Capabilities

- The tank is loaded and unloaded through the valves DN40 mounted on the cover of manway DN500 on top of tank.
- The valves for top loading and unloading are pneumatically controlled. There is a working platform around them, guaranteeing safe operation.
- The wagon is equipped with reinforced components of draw gear and crash buffers with anti-climbing system.
- The working temperature of the tank -40 °C – +50 °C.
- Derailment detector devices EDT101 and weighing valve are installed for complete wagon.
- Two platforms on both sides of the wagon are installed.

Zags 53 m³ | 4-axle tank wagon





General parameters

Axle load	22.5 t / axle
Track gauge	1,435 mm
Loading gauge	G1-TSI
Brake regime	“S”
Brake type	KE-GP-A (K) 2xCFCB (KEf distributor)
Max. speed for 90.0 t	100 km/h
Max. speed (unloaded)	120 km/h
Climate condition	T1 or T3
R_{min} (single wagon)	35.0 m
Length over buffers	12,500 mm
Effective volume	Min. 53.0 m^3
Tank central slope	Horizontal
Calculation pressure	22 bar
Tare weight	Max. 24.0 t
Payload	Min. 66.0 t
Bogie type	Y25Lsif-C-V/Y25Lsi-C or Y25Lsdif-KC1V/ Y25Lsdi-KC1

The descriptions provided herein are for general information purposes only.

Zacens 73 m³ | 4-axle tank wagon



Features

- The tank wagon is designed for the transportation of liquid chemical products compliant with the tank code L4BH.
- The heating system consists of two separate half pipe channel circuits located under the tank. The tank is insulated with thermal insulation of 100mm thickness, which is covered with stainless steel plates.
- The wagon design meets the requirements of RID, TSI, EN, UIC standards and has TEN GE marking for traffic operation.

Capabilities

- The tank is loaded/filled according to the characteristics of the transported material, through the dome (fitted with flap cover secured with 4 screws) or through the DN 150 filling nozzle.
- The tank is discharged through the lower side, through the discharge pipe DN 100 or, as an option, through the upper side of tank, by means of a deep pipe.
- Bottom valve is operated through a mechanical bilateral operating device.

Zacens 73 m³ | 4-axle tank wagon

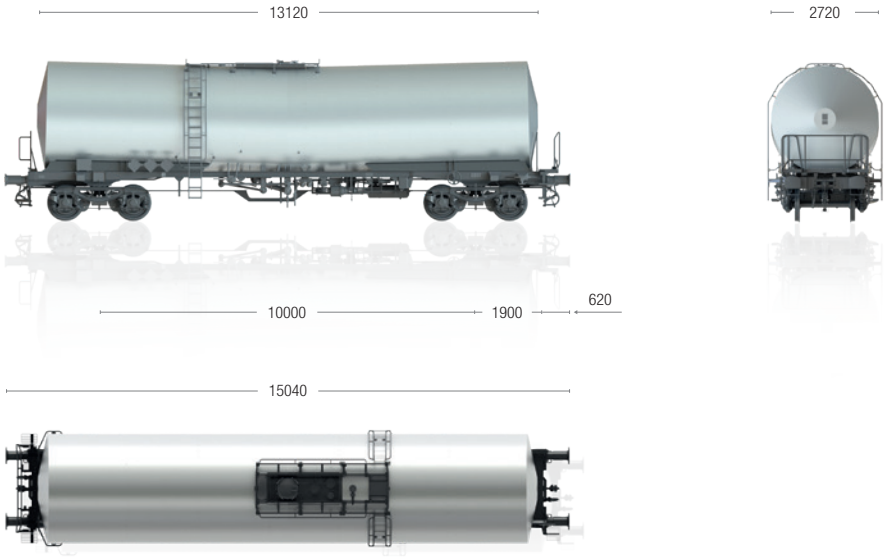

General parameters

Axle load	22.5 t / axle
Track gauge	1,435 mm
Loading gauge	G1-TSI
Brake regime	“S”
Brake type	KE-GP (K)
Max. speed for 90.0 t	100 km/h
Max. speed (unloaded)	120 km/h
Climate condition	T1
R_{min} (single wagon)	35.0 m
Length over buffers	15,040 mm
Effective volume	~ 72.2 m^3
Tank central slope	1.5°
Calculation pressure	10 bar
Max. operating pressure	3 bar
Tare weight	~ 24.1 t (Ri25)
Payload	~ 65.9 t
Bogie type	Y25Lsd-KP1
Heating temperature	max. 190 °C
Material of equipment	Carbon steel

The descriptions provided herein are for general information purposes only.

Zaens 73 m³ | 4-axle tank wagon



Features

- The tank wagon is designed for the transportation of liquid chemical products compliant with the tank code L4BH.
- The heating system consists of two separate low profile channel circuits located under the tank.
- The tank is insulated with thermal insulation of 80 mm thickness, which is covered with stainless steel plates.
- The wagon design meets the requirements of RID, TSI, EN, UIC standards and has TEN GE marking for traffic operation.

Capabilities

- The tank is loaded/filled according to the characteristics of the transported material, through the dome (fitted with flap cover secured with 4 screws).
- The tank is discharged through the lower side, through the discharge pipe DN 100.
- Bottom valve is operated through a mechanical bilateral operating device.
- The tank wagon is equipped with a thermometer.

Zaens 73 m³ | 4-axle tank wagon

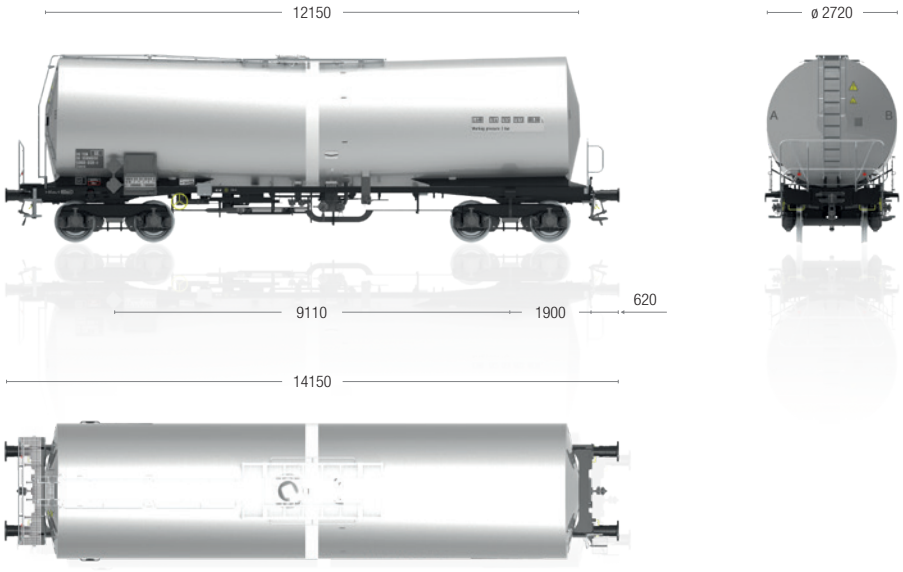

General parameters

Axle load	22.5 t / axle
Track gauge	1,435 mm
Loading gauge	G1-TSI
Brake regime	“S”
Brake type	KE-GP (K)
Max. speed for 90.0 t	100 km/h
Max. speed (unloaded)	120 km/h
Climate condition	T1
R_{min} (single wagon)	35.0 m
Length over buffers	14,150 mm
Effective volume	~ 73.5 m^3
Tank central slope	1.5°
Calculation pressure	4 bar
Max. operating pressure	3 bar
Tare weight	~ 22.4 t (BA314)
Payload	~ 67.6 t
Bogie type	Y25Lsd-KP1 or Y25Lsd-K
Heating temperature	max. 160 °C
Material of equipment	Carbon steel

The descriptions provided herein are for general information purposes only.

Zacens 79 m³ | 4-axle tank wagon

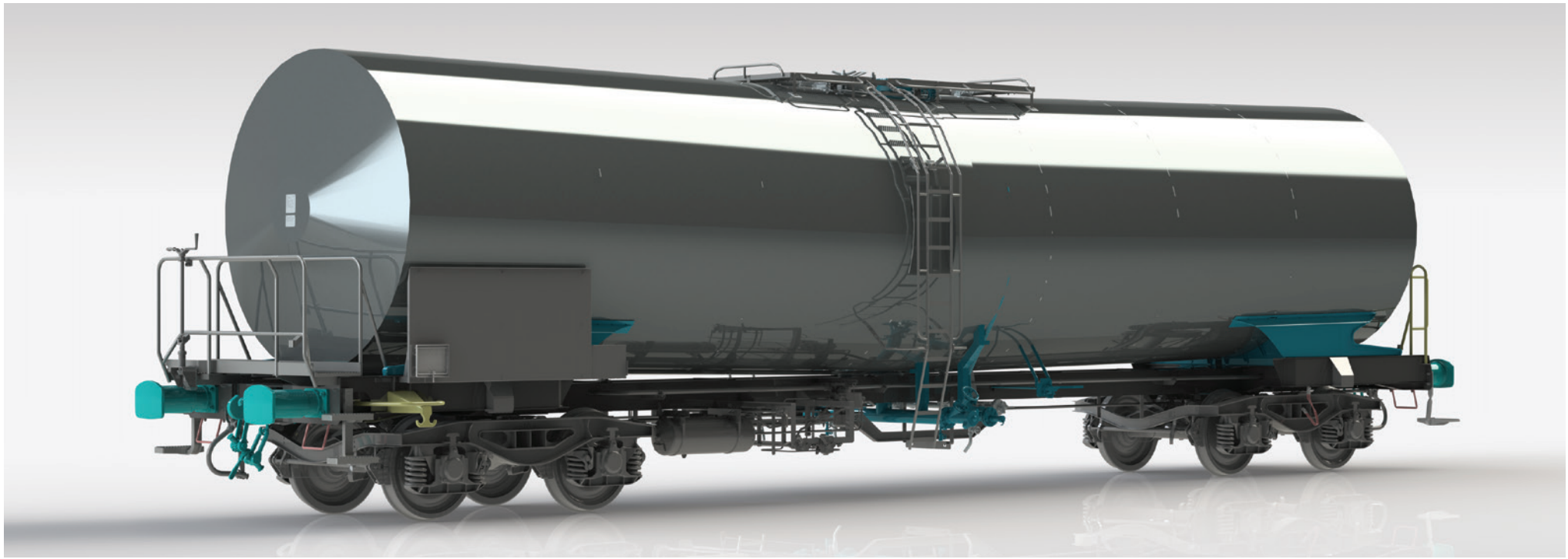

Features

- The tank wagon is designed for the transportation of liquid chemical products compliant with the tank code L4BH.
- The heating system consists of two separate half pipe channel circuits located under the tank. The tank is insulated with thermal insulation of 100 mm thickness, which is covered with galvanized (zinc-coated) steel plates.
- The wagon design meets the requirements of RID, TSI, EN, UIC standards and has TEN GE marking for traffic operation.

Capabilities

- The tank is loaded/filled according to the characteristics of the transported material, through the dome (fitted with flap cover secured with 4 screws) or through the DN 150 filling nozzle.
- The tank is discharged through the lower side, through the discharge pipe DN 100 or, as an option, through the upper side of tank, by means of a deep pipe.
- Bottom valve is operated through a mechanical bilateral operating device.

Zacens 79 m³ | 4-axle tank wagon

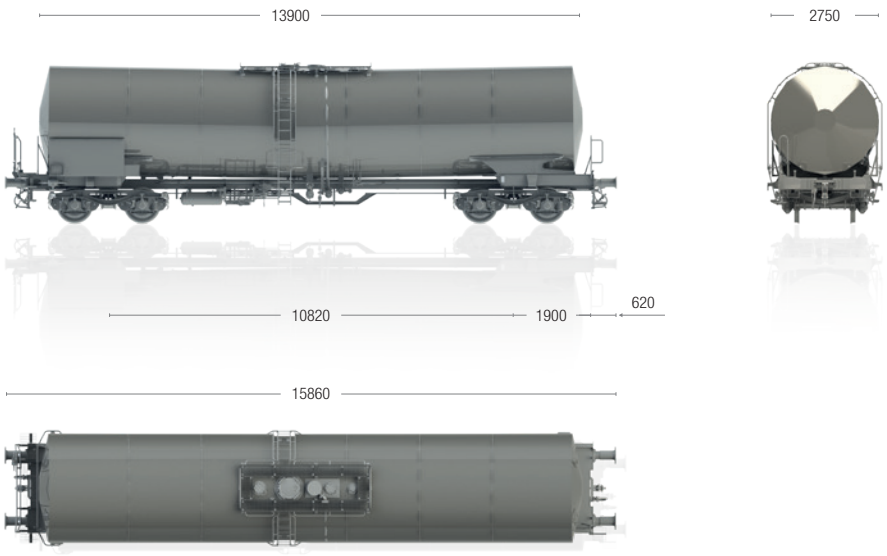

General parameters

Axle load	22.5 t / axle
Track gauge	1,435 mm
Loading gauge	G1-TSI
Brake regime	“S”
Brake type	KE-GP (K), MH-GP-(K)
Max. speed for 90.0 t	100 km/h
Max. speed (unloaded)	120 km/h
Climate condition	T1
R_{min} (single wagon)	35.0 m
Length over buffers	15,860 mm
Effective volume	~ 78,5 m^3
Tank central slope	1°
Calculation pressure	10 bar
Max. operating pressure	3 bar
Tare weight	~ 24.0 t
Payload	~ 66.0 t
Bogie type	Y25Lsd-KP1
Heating temperature	max. 190 °C
Material of equipment	Carbon steel

The descriptions provided herein are for general information purposes only.

Za(c)ns 88 m³ | 4-axle tank wagon



Features

- The 88 m³ tank wagon is designed for the transport of white mineral oil and is compliant with the tank code L4BH, with a test pressure 4 bar.
- The wagon is designed and built in accordance with the RID and TSI regulations and corresponding EN / UIC standards.
- The wagon tare weight is 20.9t (equipped with ULT25 wheelset and standard brake) or 20.7t (equipped with ULT25 wheelset and CFCB brake).
- The working temperature is between -20 °C and +50 °C.
- The wagon has TEN GE marking for traffic operation.
- The wagon structure complies with EN 12663-2 and UIC 530-1 provisions for the mounting of an Automatic Coupler.

Capabilities

- The tank is loaded through the dome (fitted with flap cover with 4 screw) or through the DN 150 filling nozzle (optional).
- The system is operated from the track level on both sides of the wagon. There are T-pipes and side oblique valves DN 100 fitted for the liquid phase.
- There is a DN 50/2" connection on the gas phase.
- Different loading and unloading equipment fitted on the tank can be adapted in accordance with customers' requirements.
- The 88 m³ tank wagon is designed to be manufactured and delivered under 4 configurations:
  - underframe: with or without central kit, fixed along the tank, MODULAR solution
  - brake: KE-GP-A(K), Kef-C distributor, in standard configuration (brake equipment of the wagon)or MH-GP-A(K) or with CFCB, both providing the basis for the further digitalization of freight wagons.

Za(c)ns 88 m³ | 4-axle tank wagon

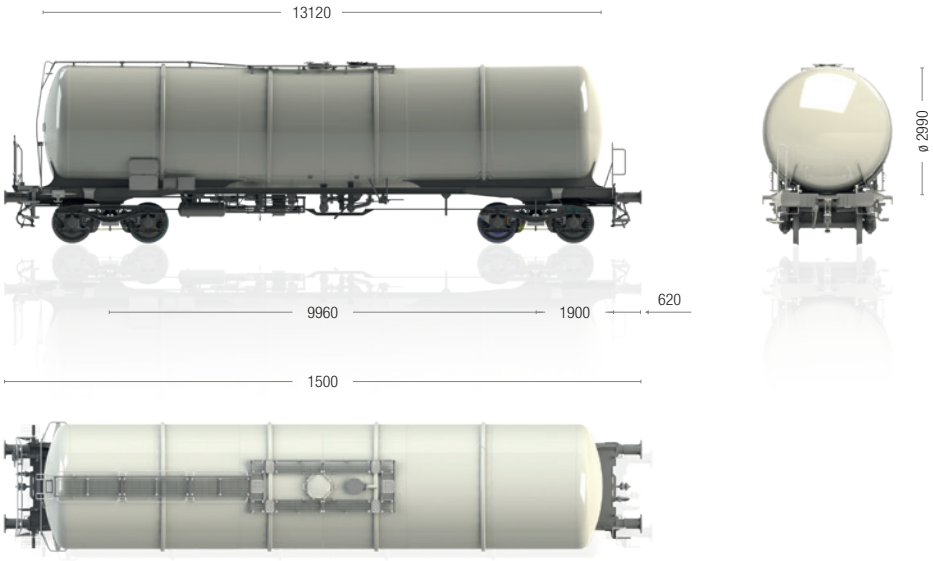

Advantages

- Reduced tare weight (20.9t or 20.7t, upon the brake configuration)
- Reduced wagon length (15.000 mm)
- Optimized tank capacity for light weight product transportation

General parameters

Axle load	22.5 t / axle
Track gauge	1,435 mm
Loading gauge	G1-TSI
Brake regime	“S”
Brake type	MH-GP-A (K), KE-GP-A (K)
Max. speed for 90.0 t	100 km/h
Max. speed (unloaded)	120 km/h
Climate condition	T1, T3
R_{min} (single wagon)	35.0 m
Length over buffers	15,000 mm
Effective volume	~ 88.0 m^3
Tank central slope	10°
Calculation pressure	4 bar / 4 bar
Max. operating pressure	3 bar
Tare weight	~ 20.9 t (VL 125)
Payload	~ 69.1 t
Bogie type	Y25Lsd-KP1, Y25Lsdi(f)-KCl(V)
Material of equipment	Carbon steel

The descriptions provided herein are for general information purposes only.

Za(c)ns 98 m³ | 4-axle tank wagon for WMO

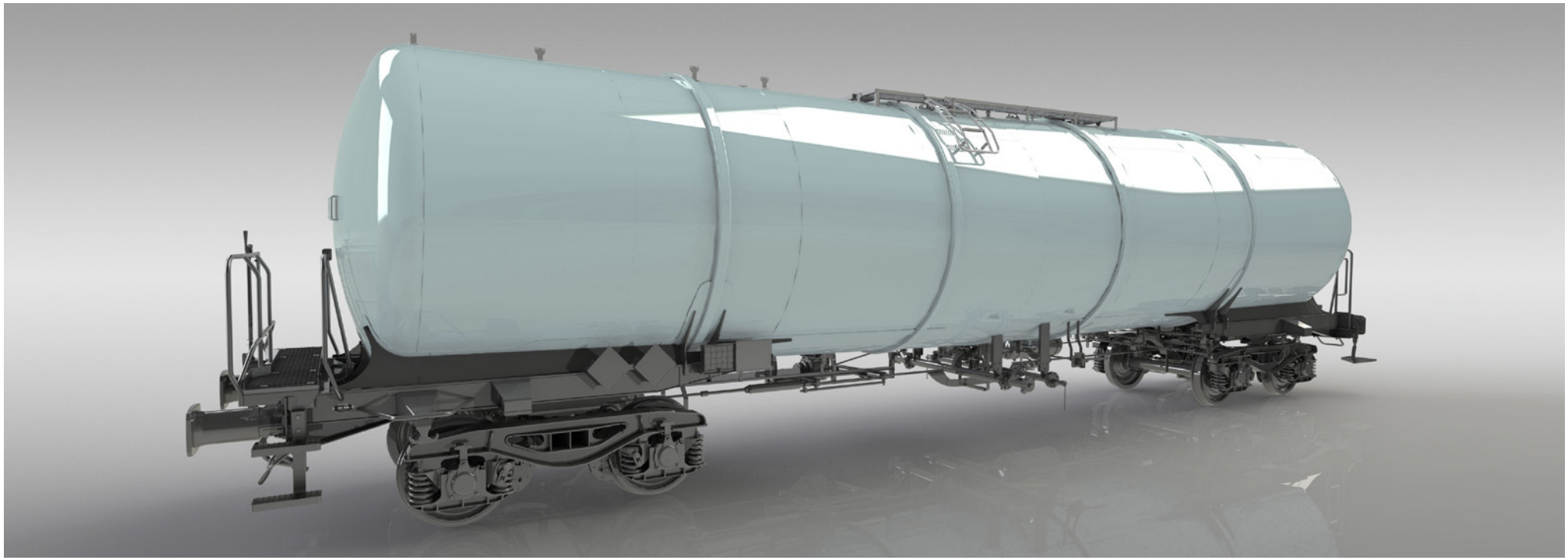

Features

- The 98 m³ tank wagon is designed for the transport of white mineral oil and is compliant with the tank code L4BH, with a test pressure 4 bar.
- The wagon is designed and built in accordance with the RID and TSI regulations and corresponding EN / UIC standards.
- The wagon tare weight is 21.3t (equipped with BA303 wheelset and standard brake) or 21.1t (equipped with BA303 wheelset and CFCB brake).
- The working temperature is between -20 °C and +50 °C.
- The wagon has TEN GE marking for traffic operation.
- The wagon structure complies with EN 12663-2 and UIC 530-1 provisions for the mounting of an Automatic Coupler.

Capabilities

- The tank is loaded through the dome (fitted with flap cover with 4 screw) or through the DN 150 filling nozzle (optional).
- The system is operated from the track level on both sides of the wagon. There are T-pipes and side oblique valves DN 100 fitted for the liquid phase.
- There is a DN 50/2" connection on the gas phase.
- Different loading and unloading equipment fitted on the tank can be adapted in accordance with customers' requirements.
- The 98 m3 tank wagon is designed to be manufactured and delivered under 4 configurations:
  - underframe: with or without central kit, fixed along the tank, MODULAR solution
  - brake: KE-GP-A(K), Kef-C distributor, in standard configuration (brake equipment of the wagon)

Zacns 98 m³ | 4-axle tank wagon for WMO

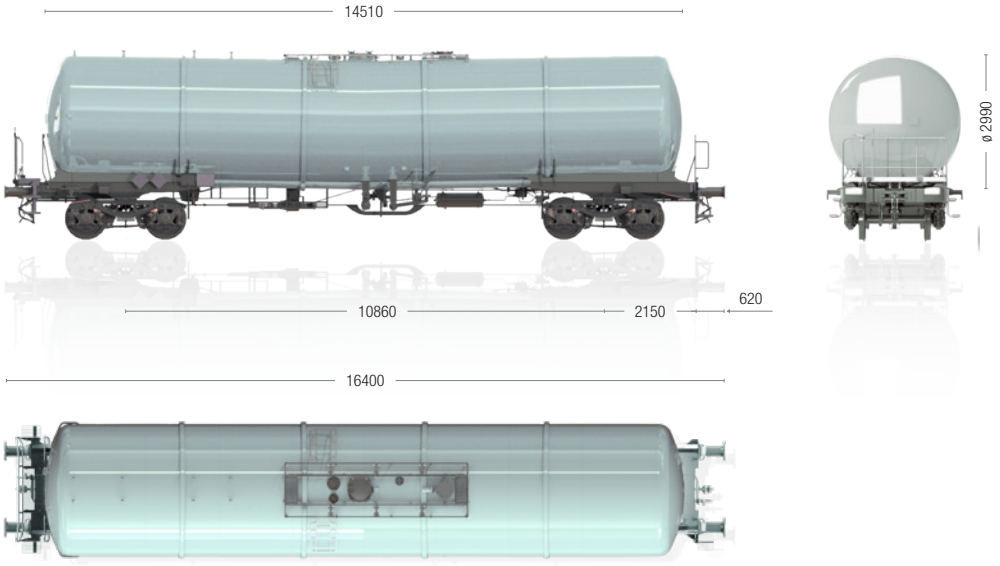

General parameters

Axle load	22.5 t / axle
Track gauge	1,435 mm
Loading gauge	G1
Brake regime	"S"
Brake type	KE-GP-A (K)
Max. speed at 90.0 t	100 km/h
Max. speed (unloaded)	120 km/h
Climate condition	T1
R_{min} (single wagon)	35 m
Length over buffers	16,400 mm
Distance over extreme axis	12,660 mm
Effective volume	~ 98.0 m^3
Tank central slope	1.0°
Calculation pressure	4.0 bar
Max. operating pressure	3.0 bar
Tara weight	31.3 t
Payload	68.7 t
Bogie type	Y25Lsd-KP1(V) / Y25Lsdi(f)-KC1(V)
Material of equipment	Carbon steel

The descriptions provided herein are for general information purposes only.

Advantages

- Reduced tare weight (21.1t or 21.3t, upon the brake configuration)
- Reduced wagon length (16.400 mm)
- Optimized tank capacity for light weight product transportation

102 m³-Z08D | 4-axle fuel tank wagon UK



Features

- This four-axle tank wagon is suitable for transportation of petrochemical products compliant with the L4BF tank code.
- Wagon is equipped with vapour recovery system.
- The wagon design meets the requirements of RID, NTSN, RGS, EN standards.

Capabilities

- The tank is loaded/filled through the top dome.
- The tank can be discharged on the both sides through the TODO couplings.
- Bottom valve is operated by a mechanical bilateral operating device.
- Wagon is equipped with one weigh valve.

102 m³-Z08D | 4-axle fuel tank wagon UK

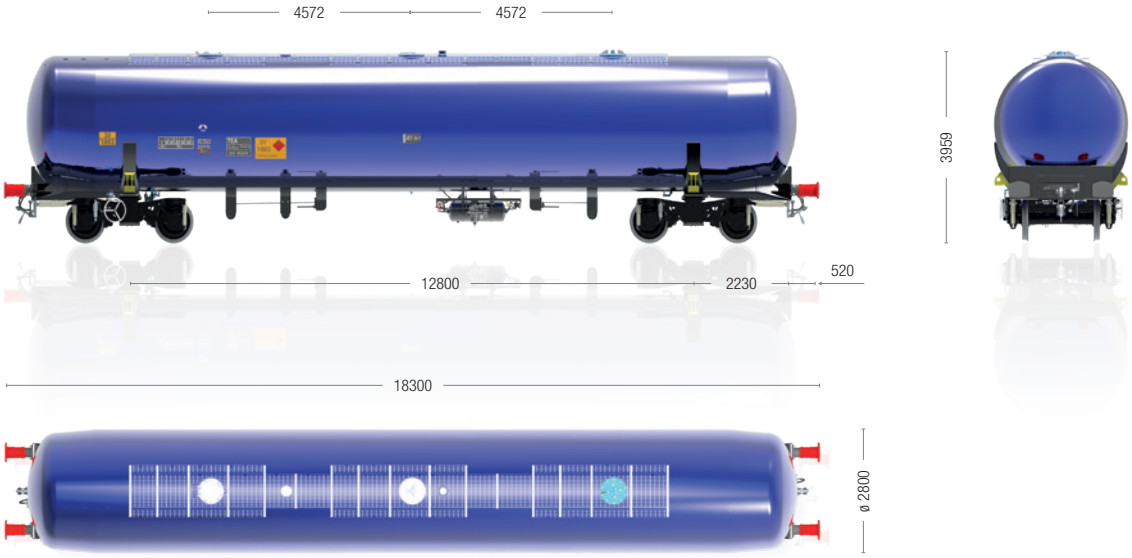

General parameters

Axle load	25.4 t / axle
Track gauge	1,435 mm
Loading gauge	W6a
Brake shoe	Cosid 804
Max. speed at 101,6 t	100 km/h
Max. speed at (unloaded)	120 km/h
Climate condition	T1
R_{min} (single wagon)	80.0 m
Tare weight	25.8 t
Payload	75.8 t
Effective volume	101.5 m^3
Test pressure	4 bar
Max.operating pressure	3 bar
Bogie type	LN25 with BFCB integrated brake

The descriptions provided herein are for general information purposes only.

Zags 103 m³ | 4-axle tank wagon



Features

- This tank wagon is designed for transportation of anhydrous ammonia UN1005 and liquefied hydrocarbons (LPG) as per tank code P29BH.
- The wagon is designed and built in according to RID and TSI regulations and corresponding EN / UIC standards. The wagon has TEN GE marking for traffic operation.
- Underframe comply with EN 12663-2 and UIC 530-1 provisions for mounting of Automatic Coupler
- Optimized capacity to wagon weight for ammonia, anhydrous UN1005
- Tank head thickness according to RID TE 25 b)

Capabilities

- The wagon is equipped with bottom valves unloading-loading fittings which are hydraulically controlled on both wagon sides from the track level.
- There are T-pipes and side oblique valves DN 80 fitted for the liquid and gaseous phase. Additionally on the gas phase is a reduction (DN 80/DN 50) as a standard.
- Tank inspection is possible due to access through a DN 500 manway with a cover according EN 12561-6 located on the one of head tank.
- Ready for assembly sunshield and change of tank code on P27BH.
- The lowest temperature at which the tank can be filled is -40 °C.
- Different loading and unloading equipment fitted on the tank can be adapted in accordance with customer requirements

Zags 103 m³ | 4-axle tank wagon

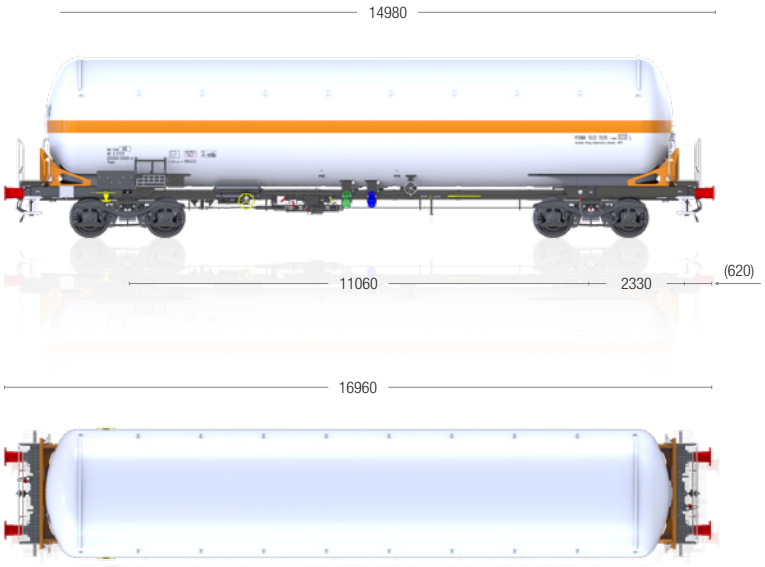



- Use of different types of wheelsets, axle boxes, brake blocks, buffers, draw gear etc.
- Position of the manhole in the tank head axis according to intellectual property No. Ru.068711
- Additional devices improving safety (option): anti-climbing systems, derailment detector device EDT101
- Protective shield according to RID TE 25 d), second platform and level gauge are an additional option [See picture]

General parameters

Axle load	22.5 t / axle
Track gauge	1,435 mm
Loading gauge	G1-TSI
Brake regime	“S”
Brake type	KE-GP (K)
Max. speed for 90.0 t	100 km/h
Max. speed (unloaded)	120 km/h
Climate condition	T1
R_{min} (single wagon)	35.0 m
Length over buffers	16,960 mm
Effective volume	~ 103.0 m^3
Tank central slope	Horizontal
Calculation pressure	29 bar
Tare weight	~ 34.9 t
Payload	~ 55.1 t
Bogie type	Y25Lsd-KP1

* The tare weight of the wagon depends on the bogie type, wheelsets used and additional equipment.
Weight of the wagon in the photo- ~35.7
The descriptions provided herein are for general information purposes only.

Zags 106 m³ | 4-axle tank wagon for Ammonia



Features

- The 4-axle tank wagon is designed for the transport of ammonia anhydrous UN1005 and liquefied hydrocarbons (LPG) compliant with the tank code P26BH, with a test pressure 26 bar.
- The wagon is design and built in accordance with the RID and TSI regulations and corresponding EN / UIC / ERA standards.
- Wagon tare weight is 34,4 t ±2% (equipped with BA303 wheelset); operating temperature between -25°C and +40°C (External air temperature ranges: T1 acc. (EU) 321/2013)

Capabilities

- The wagon is equipped with bottom valves (DN80) unloading-loading fittings which are hydraulically controlled on both wagon sides from the track level.
- There are T-pipes and side oblique valves DN80 fitted for the liquid and gaseous phase.
- Additionally on the gas phase is a reduction (DN80/DN50) and covers. Different loading and unloading equipment fitted on the tank can be adapted in accordance with customer requirements
- Minimum filling temperature allowed: - 40°C
- The wagon has TEN marking for traffic operation.

Zags 106 m³ | 4-axle tank wagon for Ammonia

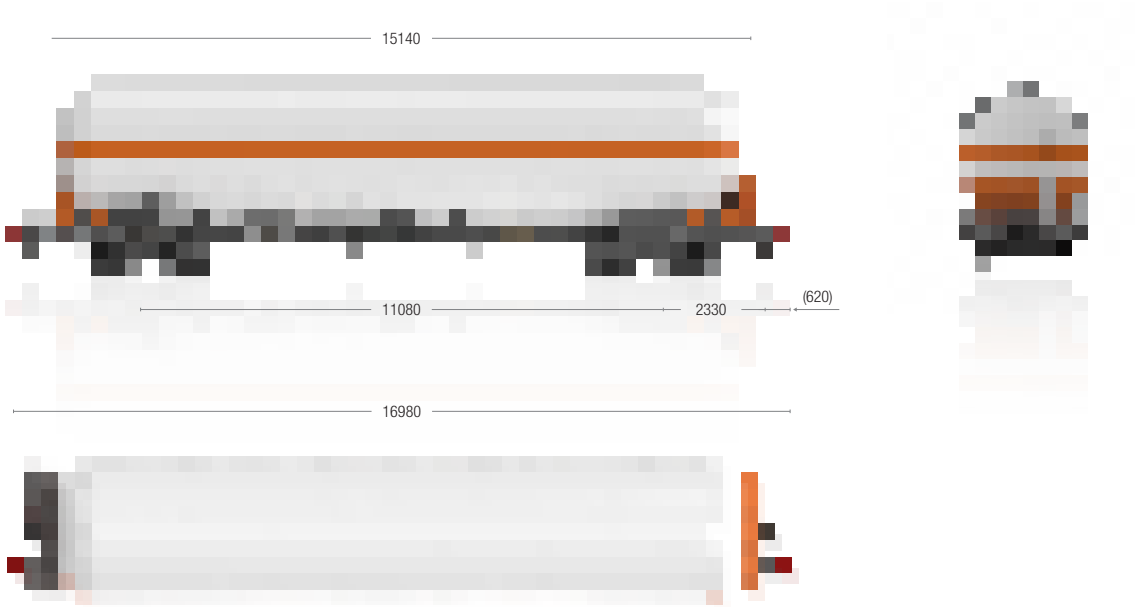

General parameters

Axle load	22.5 t / axle
Track gauge	1,435 mm
Loading gauge	G1-TSI
Brake regime	“S”
Brake type	KE-GP (K)
Max. speed for 90.0 t	100 km/h
Max. speed (unloaded)	120 km/h
Climate condition	T1
R_{min} (single wagon)	35.0 m
Length over buffers	16,980 mm
Effective volume	~ 106.0 m^3
Tank central slope	Horizontal
Calculation pressure	26 bar
Tare weight*	~ 34.4 t (BA303)
Payload	~ 55.6 t
Bogie type	Y25Lsd-KP1

*The tare weight of the wagon depends on the bogie type, wheelsets used and additional equipment.
*Estimated corrosion allowance C2=0.5
The descriptions provided herein are for general information purposes only.

Advantages

- Reduced tare weight
- Optimized capacity and weight tare for ammonia
- Optimized weighting length
- Additional devices improving safety (option): anti-climbing systems, derailment detector device EDT101, second platform
- The possibility of using two types of brake blocks

Zags 113 m³ | 4-axle LPG tank wagon

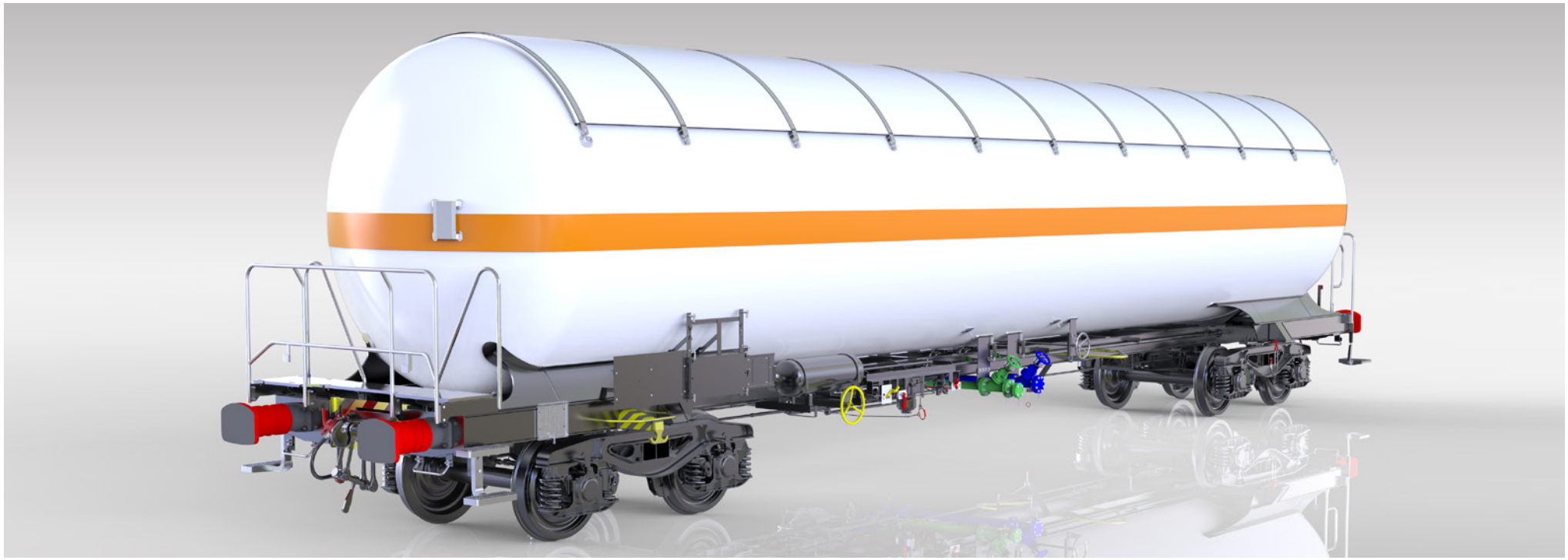

Features

- This tank wagon is designed for transportation of liquefied hydrocarbons (LPG) as per tank code P25BH.
- The wagon is designed and built in according to RID and TSI regulations and corresponding EN / UIC standards. The wagon has TEN GE marking for traffic operation.
- Underframe comply with EN 12663-2 and UIC 530-1 provisions for mounting of Automatic Coupler
- Tank head thickness according to RID TE 25 b)

Capabilities

- The wagon is equipped with bottom valves unloading-loading fittings which are hydraulically controlled on both wagon sides from the track level.
- There are T-pipes and side oblique valves DN 80 fitted for the liquid and gaseous phase. Additionally on the gas phase is a reduction (DN 80/DN 50) as a standard.
- Tank inspection is possible due to access through a DN 500 manway with a cover according EN 12561-6 located on the one of head tank.
- The lowest temperature at which the tank can be filled is -40 °C.
- Different loading and unloading equipment fitted on the tank can be adapted in accordance with customer requirements

Zags 113 m³ | 4-axle LPG tank wagon

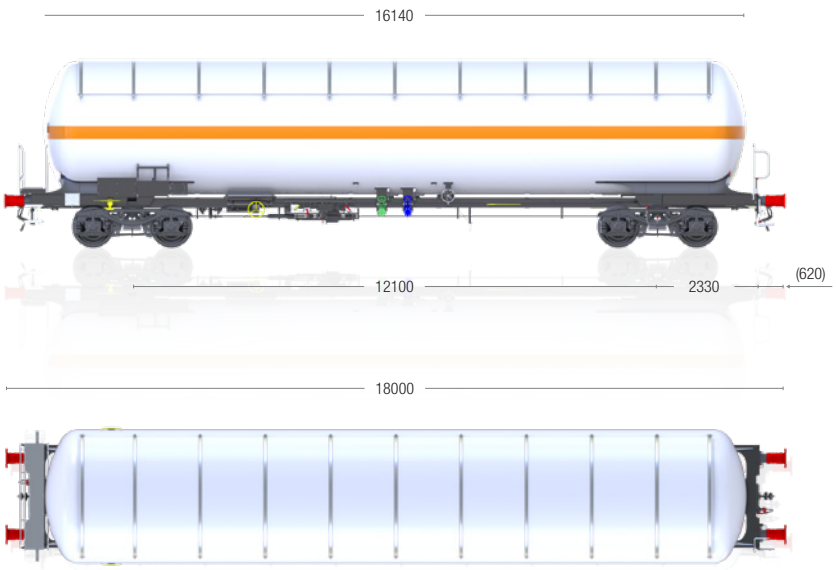



General parameters

Axle load	22.5 t / axle
Track gauge	1,435 mm
Loading gauge	G1-TSI
Brake regime	“S”
Brake type	KE-GP (K)
Max. speed for 90.0 t	100 km/h
Max. speed (unloaded)	120 km/h
Climate condition	T1
R_{min} (single wagon)	35.0 m
Length over buffers	18,000 mm
Effective volume	~ 113.0 m^3
Tank central slope	Horizontal
Calculation pressure	25 bar
Tare weight*	~ 31.7 t
Payload	~ 58.3 t
Bogie type	Y25Lsd-KP1

*The tare weight of the wagon depends on the bogie type, wheelsets used and additional equipment.
*Estimated corrosion allowance C2=0.3
The descriptions provided herein are for general information purposes only.

- Use of different types of wheelsets, axle boxes, brake blocks, buffers, draw gear etc.
- Position of the manhole in the tank head axis according to intellectual property No. Ru.068711
- Automatic change of load status empty- loaded
- Additional devices improving safety (option): anti-climbing systems, derailment detector device EDT101, protective shield according to RID TE 25 d), second platform, level gauge

Zags 117 m³ | 4-axle LPG tank wagon



Features

- This tank wagon is designed for transportation of liquefied hydrocarbons (LPG) as per tank code P25BH.
- The wagon is designed and built in according to RID and TSI regulations and corresponding EN / UIC standards. The wagon has TEN GE marking for traffic operation.
- Underframe comply with EN 12663-2 and UIC 530-1 provisions for mounting of Automatic Coupler
- Tank head thickness according to RID TE 25 b)
- Automatic change of load status empty- loaded
- Position of the manhole in the tank head axis according to intellectual property No. Ru.068711 which allows maximum use of space and meets the requirements of RID

Capabilities

- The wagon is equipped with bottom valves unloading-loading fittings which are hydraulically controlled on both wagon sides from the track level.
- There are T-pipes and side oblique valves DN 80 fitted for the liquid and gaseous phase. Additionally on the gas phase is a reduction (DN 80/DN 50) as a standard.
- Tank inspection is possible due to access through a DN 500 manway with a cover according EN 12561-6 located on the one of head tank.
- The lowest temperature at which the tank can be filled is -40 °C.
- Different loading and unloading equipment fitted on the tank can be adapted in accordance with customer requirements

Zags 117 m³ | 4-axle LPG tank wagon

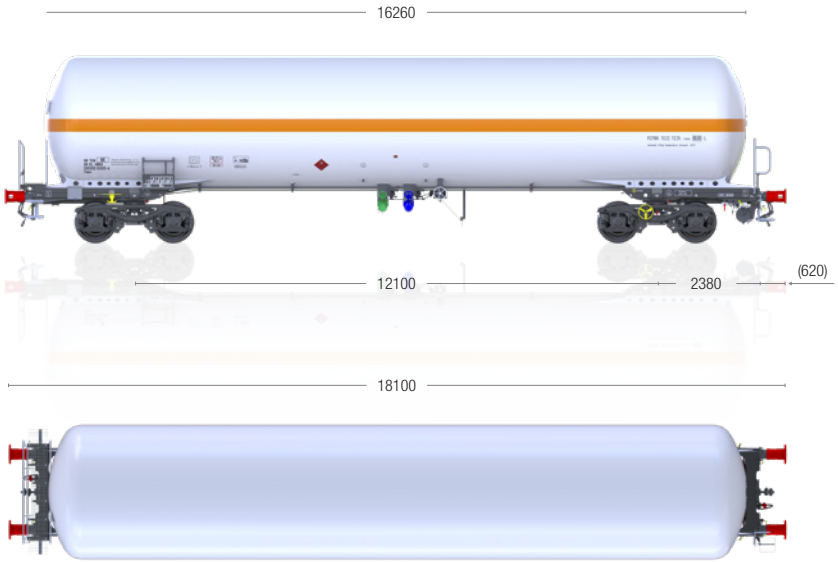



- Use of different types of wheelsets, axle boxes, brake blocks, buffers, draw gear etc.
- Additional devices improving safety (option): anti-climbing systems, derailment detector device EDT101, protective shield according to RID TE 25 d), second platform, level gauge

General parameters

Axle load	22.5 t / axle
Track gauge	1,435 mm
Loading gauge	G1-TSI
Brake regime	“S”
Brake type	KE-GP (K)
Max. speed for 90.0 t	100 km/h
Max. speed (unloaded)	120 km/h
Climate condition	T1
R_{min} (single wagon)	35.0 m
Length over buffers	18,100 mm
Effective volume	~ 117.0 m^3
Tank central slope	Horizontal
Calculation pressure	27 bar
Tare weight	~ 31.8 t
Payload	~ 58.5 t
Bogie type	Y25Lsdi-KC1V / Y25Lsdif-KC1

* The tare weight of the wagon depends on the bogie type, wheelsets used and additional equipment
The descriptions provided herein are for general information purposes only.

Zags 123 m³ | 4-axle LPG tank wagon



Features

- This tank wagon is designed for transportation of liquefied hydrocarbons (LPG) as per tank code P25BH.
- The wagon is designed and built in according to RID and TSI regulations and corresponding EN / UIC standards. The wagon has TEN GE marking for traffic operation.
- Underframe comply with EN 12663-2 and UIC 530-1 provisions for mounting of Automatic Coupler
- Tank head thickness according to RID TE 25 b)
- Adapted to operate on standard TSI railway gauge (1435 mm) and Iberia railway gauge (1668mm)

Capabilities

- The wagon is equipped with bottom valves unloading-loading fittings which are hydraulically controlled on both wagon sides from the track level.
- There are T-pipes and side oblique valves DN 80 fitted for the liquid and gaseous phase. Additionally on the gas phase is a reduction (DN 80/DN 50) as a standard.
- Tank inspection is possible due to access through a DN 500 manway with a cover according EN 12561-6 located on the one of head tank.
- The lowest temperature at which the tank can be filled is -40 °C.

Zags 123 m³ | 4-axle LPG tank wagon

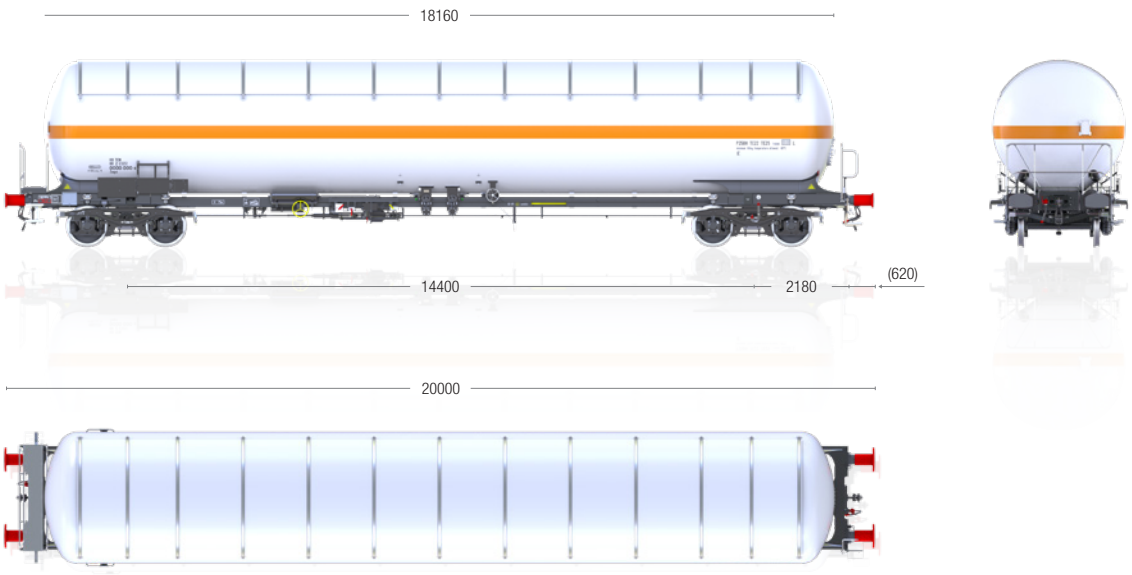

General parameters

Axle load	22.5 t / axle
Track gauge	1,435 / 1,668 mm
Loading gauge	G1-TSI
Brake regime	“S”
Brake type	KE-GP (K)
Max. speed for 90.0 t	100 km/h
Max. speed (unloaded)	120 km/h
Climate condition	T1 / T3
R_{min} (single wagon)	35.0 m / 75.0 m
Length over buffers	20,000 mm
Effective volume	~123.0 m^3
Tank central slope	Horizontal
Calculation pressure	25 bar
Tare weight (Estimated corrosion allowance C_2=0.3)	~33.2 t / ~33.9 (BA9090)
Payload	~56,8 t / ~56.1 t
Bogie type	Y25Lsd-KP1 / Y25Lsde-K

*The tare weight of the wagon depends on the bogie type, wheelsets used and additional equipment.
The descriptions provided herein are for general information purposes only.

- Different loading and unloading equipment fitted on the tank can be adapted in accordance with customer requirements
- Use of different types of wheelsets, axle boxes, brake blocks, buffers, draw gear etc.
- Position of the manhole in the tank head axis according to intellectual property No. Ru.068711
- Automatic change of load status empty- loaded
- Additional devices improving safety (option): anti-climbing systems, derailment detector device EDT101, protective shield according to RID TE 25 d), second platform, level gauge

Rijmmns 660 | 4-axle flat wagon with tarpaulin top



Features

- This flat wagon is suitable for transportation of products and goods which need to be protected against rain or snow during the transport. The wagon allows transportation of high quality products with a high level of requirements in terms of loading and transportation safety.
- The under-frame structure has a sliding central sill, equipped with a long stroke hydrodynamic damper, which can absorb most of the buffing impact energy that might damage the transported products.
- The wagon design meets the requirements of TSI, EN, UIC standards and has TEN GE marking for traffic operation.

Capabilities

- The wagon can be loaded either from the top by crane, or from the sides after the side stanchions are pushed fully down in their side pockets.
- Load fixation at wagon is possible in various ways (the wagon is fitted with 2 x 8 side stanchions and 2 x 7 assurance devices) according to UIC regulations.

Rijmmns 660 | 4-axle flat wagon with tarpaulin top

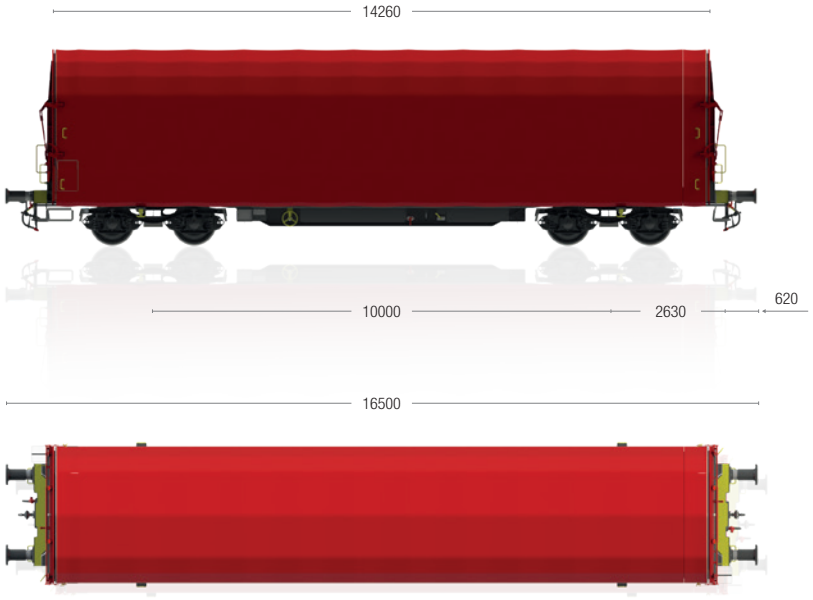

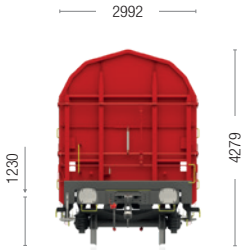

General parameters

Axle load	22.5 t / axle
Track gauge	1,435 mm
Loading gauge	G1-TSI
Brake regime	“S”
Brake type	GP-A
Max. speed at 90.0 t	100 km/h
Max. speed at (unloaded)	120 km/h
Climate condition	T1
R_{min} (single wagon)	35.0 m
Length over buffers	16,500 mm
Loading length	14,000 mm
Loading width	2,750 mm
Loading width (between stanchions)	2,650 to 1,250 mm
Tare weight (with HB)	~ 27.6 t
Payload	~ 62.4 t
Loading area	39.0 m^2
Loading height from T.O.R.	1,230 mm
Stanchions height	1,200 mm
Central sill stroke	350 mm
Floor material	Acc. DIN 68705-2
Bogie type	Y25Lsd1

The descriptions provided herein are for general information purposes only.

Shimmns S10B | 4-axle steel product wagon



Features

- This covered freight wagon is used for the transportation of cold steel coils placed in special cradles.
- The coils are protected against environmental conditions by a tarpaulin, which can be opened at both wagon ends. The tarpaulin provides that 2/3 of the wagon can be opened.
- The wagon is accessible for loading/unloading from the top and from the sides by industrial cranes and lifts.
- The wagon frame is made in accordance to the new, patented WS (EP 1 298 022) standard, which has a lighter, optimized construction, carrying loads up to 100 tons.
- The wagon is equipped with patented mechanisms for operation of the arms (222981), which can be controlled from one side, without having to go to the other side of the wagon.
- The wagon design meets the requirements of TSI, EN, UIC standards and has TEN GE marking for traffic operation.

Capabilities

Characteristics	Cradle 1	Cradle 2	Cradle 3	Cradle 4	Cradle 5
Min. ø of coil [mm]	1,000	800	1,000	800	1,000
Max. ø of coil [mm]	2,250	1,700	2,700	1,700	2,250
Max. weight of coil [t]	34/36	17	45	17	34/36

The wagon is equipped with an advanced system for conditioning monitoring and GPS trackings. This system communicates back to the operators via an internet portal. The Energy required to operate the system is generated by an axle generator in combination with a battery. The system transfers the data of the current weight of each wheel and temperatures of axles and bearings. Seven lamps are mounted on

Shimmns S10B | 4-axle steel product wagon



the board signaling the current load information to the required people. The system includes sensors for acceleration and retardation in order to gather information for diagnostic purposes both while driving or at standstill, e.g.: impacts during shunting. A GPS Antenna permanently receives an accurate positional signal which is transferred via GSM to the wagon tracker portal. Each wagon can be monitored in real time.

Advantages

- Reduced tare weight.
- Simplified service of the wagon.
- Sensor system for receiving information:
  geographical location, cargo, speed, temperature.

General parameters

Axle load	22.5 t / axle
Track gauge	1,435 mm
Loading gauge	G1-TSI
Brake regime	“S”
Brake type	KE-GP A (K)
Max. speed at 90.0 t	100 km/h
Max. speed at 58.0 t	120 km/h
Climate condition	T1 (T3)
R_{min} (single wagon)	35.0 m
Length over buffers	12,040 mm
Tare weight	21.45 t
Payload	68.55 t
Bogie type	Y25Lsd-K (other types available on request)
Wheelset	LL306 (other types available on request)
Brake shoes type	C810 and Jurid 822
Number of cradles	5
Width in cradle	2,410 mm
Number of arms	20 pcs
Type of arms	Light, simple (possibility of lifting the arms)
Coils fixation type	Greenbrier patented
Surface of cradles	Techtan
Number of inter. archs	7
Supports between archs	No
Front wall mechanism	4 points

The descriptions provided herein are for general information purposes only.

Shimmns S12A | 4-axle steel product wagon



Features

- This covered freight wagon is used for the transportation of cold steel coils placed in special cradles.
- The coils are protected against environmental conditions by a tarpaulin, which can be rolled at both wagon ends. The tarpaulin provides that 2/3 of the wagon can be opened.
- The wagon is accessible for loading/unloading from the top and from the sides by industrial cranes and lifts.
- The wagon design meets the requirements of TSI, EN, UIC standards and has TEN GE marking for traffic operation.
- The wagon is equipped with cargo protection system type ECSS - Efficient Coil Security System. Arms can be controlled from one side, without having to go to the other side of the wagon. Mechanism of the arms drive is based on differential. System copyright
- Underframe comply with EN 12663-2 and UIC 530-1 provisions for mounting of Automatic Coupler

Capabilities

Loading Cradles	Cradle 1	Cradle 2	Cradle 3	Cradle 4	Cradle 5
Min. ø of coil [mm]	1,000	800	1,000	800	1,000
Max. ø of coil [mm]	2,250	1,700	2,700	1,700	2,250
Max. weight of coil [t]	34	17	45	17	34

Shimmns S12A | 4-axle steel product wagon

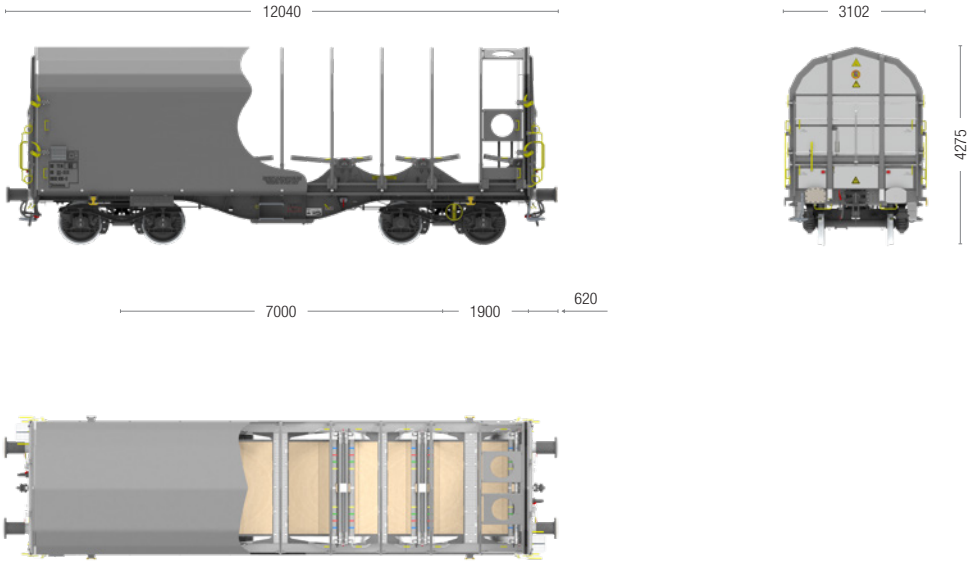

Advantages

- Reduced tare weight (19,3t)
- Simplified service of the wagon
- Simplified arm operation - Reduction in time for cargo protect/release
- Recycling friendly materials used of the arms and sheathing of front walls
- Electric arm drive possible (Automated load securing / releasing process) - then:
  - number of arms 16 pcs (or 12pcs, or 20pcs)
  - min loading width ca. 470 mm , max. loading width ca. 2,100 mm

General parameters

Axle load	22.5 t / axle
Track gauge	1,435 mm
Loading gauge	G1-TSI
Brake regime	“S”
Brake type	KE or SW, compact or standard
Max. speed at 90.0 t	100 km/h
Max. speed at 58.0 t	120 km/h
Climate condition	T1
R_{min} (single wagon)	35.0 m
Length over buffers	12,040 mm
Tare weight	18.9 t
Payload	71.1 t
Bogie type	Y25Lsd-K (other types available on request)
Wheelset	BA303 (other types available on request)
Brake shoes type	C810
Number of cradles	5
Width in cradle	2,410 mm
Number of arms	20 pcs
Type of arms	light / straight
Coils fixation type	ECSS
Surface of cradles	Plywood
Number of inter. archs	11
Front wall mechanism	4 points

The descriptions provided herein are for general information purposes only.

Shimmns ttu 728 | 4-axle coil steel products wagon



Features

- This covered freight wagon is used for the transportation of cold steel coils placed in special cradles.
- The coils are protected against environmental conditions by a tarpaulin, which can be rolled at both wagon ends. The tarpaulin provides that 2/3 of the wagon can be opened.
- The wagon is accessible for loading/unloading from the top and from the sides by industrial cranes and lifts.
- The wagon design meets the requirements of TSI, EN, UIC standards and has TEN GE marking for traffic operation.

Capabilities

Characteristics	Cradle 1	Cradle 2	Cradle 3	Cradle 4	Cradle 5
Max. ø of coil [mm]	2,250	1,700	2,700	1,700	2,250
Min. ø of coil [mm]	1,000	800	1,000	800	1,000
Max. weight of coil [t]	36	17	45	17	36

Shimmns ttu 728 | 4-axle coil steel products wagon

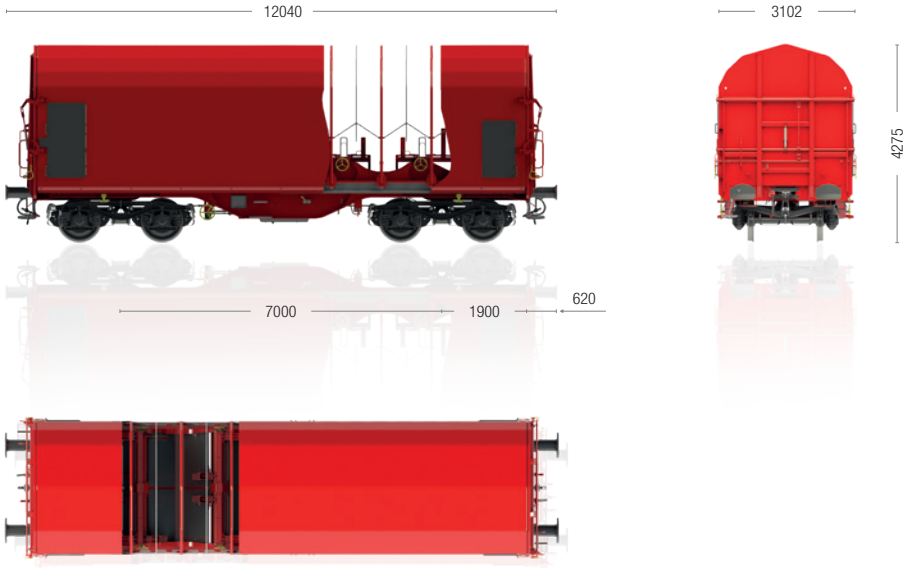

General parameters

Axle load	22.5 t / axle
Track gauge	1,435 mm
Loading gauge	G1 TSI
Brake regime	“S”
Brake type	GP-A (K)
Max. speed at 90.0 t	100 km/h
Max. speed at 58.0 t	120 km/h
Climate condition	T1
R_{min} (single wagon)	35.0 m
Length over buffers	12,040 mm
Tare weight	~ 22.7 t / 22.0 t (light bogies)
Payload	~ 67.3 t
Bogie type	Y25Ls1-K / Y25Lsd-KP1
Number of cradles	5
Width in cradle	2,410 mm
Number of arms	20 pcs (4 per coil)
Coils fixation type	Screw mechanism
Surface of cradles	Rubber 10 mm
Number of inter. archs	7
Supports between archs	Yes
Front wall mechanism	4 points

The descriptions provided herein are for general information purposes only.

Shimmns | 4-axle coil steel products wagon



Features

- This covered freight wagon is used for the transportation of cold steel coils placed in special cradles.
- The coils are protected against environmental conditions by a tarpaulin, which can be opened at both wagon ends. The tarpaulin provides that 2/3 of the wagon can be opened.
- The wagon is accessible for loading/unloading from the top and from the sides by industrial cranes and lifts.
- The wagon design meets the requirements of TSI, EN, UIC standards and has TEN GE marking for traffic operation.
- The wagon is equipped with a patented cargo protection system type ECSS – Efficient Coil Security System. The arms can be controlled from one side, without having to move to the other side of the wagon.
- The mechanism of the arms' drive is based on a differential.
- The underframe complies with EN 12663-2 and UIC 530-1 provisions for the mounting of an Automatic Coupler.

Capabilities

Characteristics	Cradle 1	Cradle 2	Cradle 3	Cradle 4	Cradle 5
Min. ø of coil [mm]	1,000	800	1,000	800	1,000
Max. ø of coil [mm]	2,250	1,700	2,700	1,700	2,250
Max. weight of coil [t]	34	17	45	17	34

Shimmns | 4-axle coil steel products wagon



Advantages

- Reduced tare weight (19,3 t).
- Simplified service of the wagon.
- Simplified arm operation – Reduction in time for cargo protection / release.
- Recycling friendly materials used for the arms and sheathing of front walls.
- Electric arm drive possible (Automated load securing / releasing process) – then:
  - Number of arms: 20 pcs. (it can operate with 12 pcs. or 16 pcs.)
  - Min. loading width ca. 470 mm, max. loading width ca. 2,100 mm

General parameters

Axle load	22.5 t / axle
Track gauge	1,435 mm
Loading gauge	G1-TSI
Brake regime	“S”
Brake type	GP-A (K)
Max. speed at 90.0 t	100 km/h
Max. speed at 58.0 t	120 km/h
Climate condition	T1
R_{min} (single wagon)	35.0 m
Length over buffers	12,040 mm
Tare weight	~ 21.8 t / 21.0 t (light bogies)
Payload	~ 68.2 t
Bogie type	Y25Ls1-K / Y25Lsd-KP1
Number of cradles	5
Width in cradle	2,410 mm
Number of arms	12 pcs (4 in middle)
Coils fixation type	UIC
Surface of cradles	Plywood 24 mm
Number of inter. archs	7
Supports between archs	Yes
Front wall mechanism	4 points

The descriptions provided herein are for general information purposes only.

Smmnps slab wagon | 4-axle steel product wagon



Features

- The freight wagon is designed for transportation of hot steel slabs, primarily between Swedish steel manufacturers and processors.
- The wagon fulfill SJ's General Technical Specification for Freight Car (GTSF) and all relevant requirements for international operation according to TSI, EN, RIV and UIC mentioned in the GTSF. The underframe and bolster beams are designed for a future raise of axleload to 30.0 tons.
- Also the running gear will be able to be accepted for a future raise of axle load to 30.0 tons on Swedish tracks.
- All components connected on steel wagon structure are function under extreme winter conditions such as packing snow, ice and temperatures down to -40 °C, as well as under heat radiation and convection coming from slab surface temperature.

Smmnps slab wagon | 4-axle steel product wagon

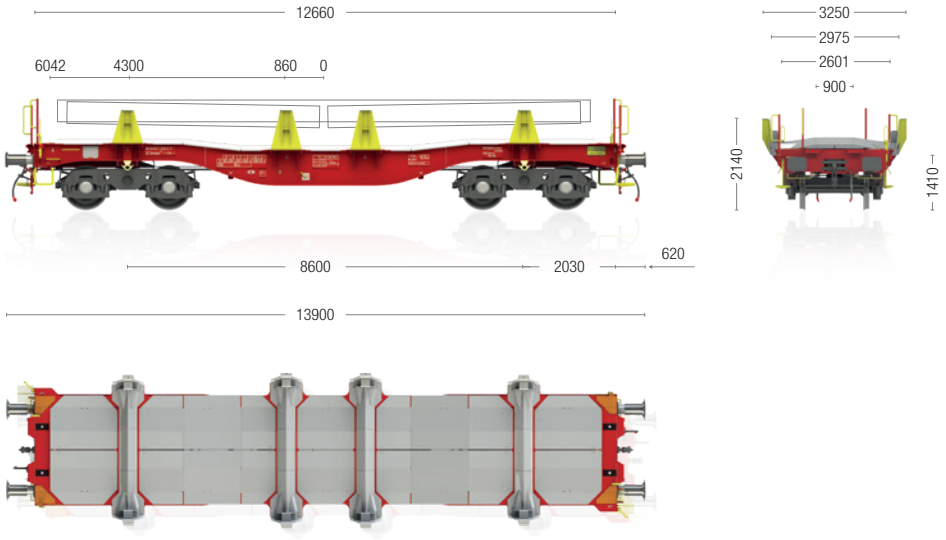

Capabilities

- Hot steel slabs with max. surface temperature 350 °C.
- Payload 79,3 t.

General parameters

Axle load	25.0 t / axle
Track gauge	1,435 mm
Loading gauge (without bolster beams)	G1-TSI
Loading gauge Sweden (with bolster beams)	BVF 586.20 Gauge F+A
Brake regime	“S”
Brake type	Integrated Clasp Brake System (ICB)
Max. speed - loaded	100 km/h
Max. speed (unloaded)	120 km/h
Climate condition	T_n
R_{min} (coupled/single)	100.0 m / 70.0 m
Buffer type	Category C, UIC 526-1
Screw coupling	850 kN, UIC 826
Draw gear	1000 kN / 21 kJ, UIC 520
Length over buffers	13,900 mm
Tare weight	20.7 t
Max. wagon height	2,388 mm
Loading length – within end pockets	12,052 mm
Maximum loading width – within bolster lateral stops	2,975 / 2,601 mm
Bolster lateral stop height over T.O.R.	2,140 mm
Loading height of unloaded car over T.O.R – support beams A	1,700 mm
Loading height of unloaded car over T.O.R – support beams B	1,620 mm
Bogie type	Axle motion III
Wheel diameter	920 mm

The information provided herein is for general information purposes only.

Sfhimmns | 4-axle coil steel products wagon



Features

- This covered freight wagon is used for the transportation of cold steel coils placed in special cradles.
- The coils are protected against environmental conditions by a tarpaulin, which can be rolled at both wagon ends. The tarpaulin provides that 2/3 of the wagon can be opened. The wagon is accessible for loading/unloading from the top and from the sides by industrial cranes and lifts.
- The wagon design meets the requirements of TSI, EN, UIC standards. It has TEN GE marking for traffic operation and is suitable for traffic with Great Britain.

Capabilities

Characteristics	Cradle 1	Cradle 2	Cradle 3	Cradle 4	Cradle 5
Min. ø of coil [mm]	1,000	800	1,000	800	1,000
Max. ø of coil [mm]	2,150	1,700	2,400	1,700	2,150
Max. weight of coil [t]	34	17	45	17	34

Sfhimmns | 4-axle coil steel products wagon

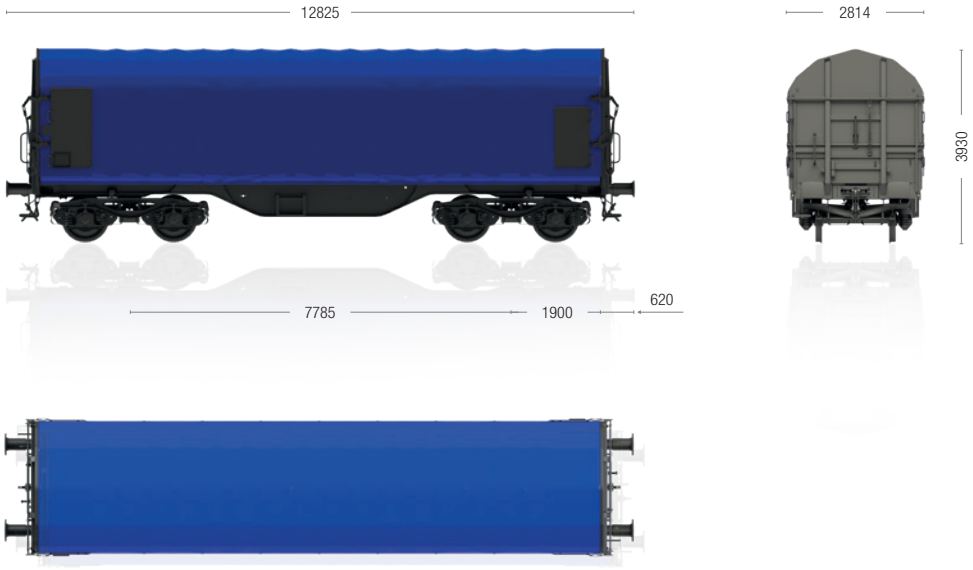

General parameters

Axle load	22.5 t / axle
Track gauge	1,435 mm
Loading gauge	G1-TSI / W6a GB
Brake regime	“S”
Brake type	GP-A (K)
Max. speed at 90.0 t	100 km/h
Max. speed at 58.0 t	120 km/h
Climate condition	T1
R_{min} (single wagon)	35.0 m
Length over buffers	12,825 mm
Tare weight	~ 21.5 t / 20.9 t (light bogies)
Payload	~ 68.5 t
Bogie type	Y25Ls1-K / Y25Lsd-KP1
Number of cradles	5
Width in cradle	2,260 mm
Number of arms	12 pcs (4 in middle)
Coils fixation type	UIC
Surface of cradles	Rubber 10 mm
Number of inter. archs	7
Supports between archs	Yes
Front wall mechanism	4 points

The descriptions provided herein are for general information purposes only.

Shmmnss | 4-axle hot coil steel products wagon



Features

- This wagon is suitable for the transportation of steel coils or steel slabs in hot condition with max. 350 °C.
- The wagon is fitted with a coil fastening system for securing of the coils transverse movement and with removable stanchions for securing of the slabs transverse movement.
- The wagon design meets the requirements of TSI, EN, UIC standards and has TEN GE marking for traffic operation. It can be loaded up to 25 t / axle and run on “E” track lines.

Capabilities

Characteristics	Cradle 1	Cradle 2	Cradle 3	Cradle 4	Cradle 5
Min. ø of coil [mm]	1,000	1,000	1,000	1,000	1,000
Max. ø of coil [mm]	1,650	2,400	2,400	2,400	1,650
Max. weight of coil [t]	19	38	40	38	19

Shmmnss | 4-axle hot coil steel products wagon

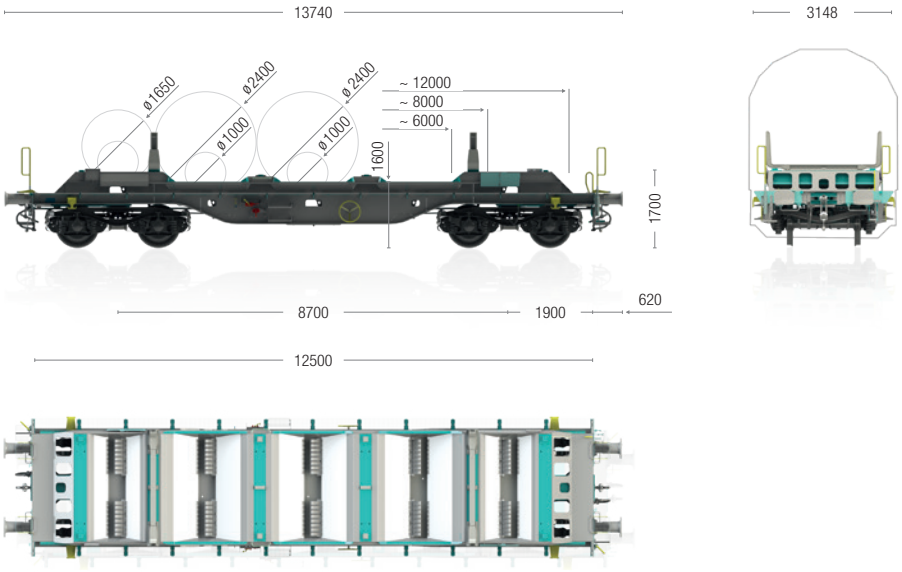

Slab lenght [mm]	Weight max. [t]	Loading width [mm]
~ 6,000 / ~ 8,000 / ~ 12,000	78	Max. 2,050

General parameters

Axle load	25.0 t / axle
Track gauge	1,435 mm
Loading gauge	G1-TSI
Brake regime	“SS”
Brake type	GP-A (K)
Max. speed for 100.0 t	100 km/h
Max. speed at 80.0 t	120 km/h
Climate condition	T1
R_{min} (single wagon)	35.0 m
Length over buffers	13,740 mm
Tare weight	~ 22.0 t
Payload	~ 78.0 t
Bogie type	Y25SLss1-K
Number of cradles	5
Width in cradle	2,200 mm
Number of arms	12 pcs (4 in middle)
Coils fixation type	Piano system
Surface of cradles	Paint
Number of inter. archs	2

The descriptions provided herein are for general information purposes only.

Laaers L04A | 2x2-axle wagon, Series Laadgrs - open flat car carrier



Features

- This wagon is designed for the transportation of automobiles, vans and containers.
- For transport of the vehicles wagon is equipped with wheel chocks operable by feet.
- Lower floor is designed in order to permit to drain rain water off and is made of galvanized grate bridging plates.
- For transport of the containers flip down spigots have to be installed.
- This wagon is designed according to TSI, EN, Group Standards for EU traffic operation.

Capabilities

- Loading possibilities depending of the dimensions of the vehicles.
- The wagon is dedicated to transport of containers 20´; 30´; 40´ acc. to ISO668. Wheel chocks has to be removed during transport of containers.
- Arrangement of containers acc. to UIC 571-4, attachment A drawing 3.

Laaers L04A | 2x2-axle wagon, Series Laadgrs - open flat car carrier

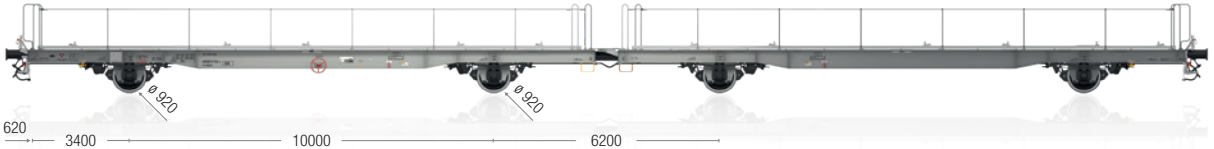

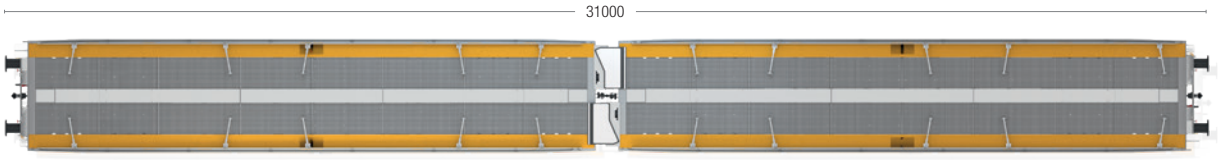



Table of load limits

basing on the payload of wheelsets (22.5 t):

	A	B	C	D
S	33.3 t	41.3 t	49.3 t	59.3 t
120 km/h	00.0 t			

General parameters

Wagon length over buffers	33,000 mm
Underframe length	15,560 mm
Buffer / coupler axis height above ToR (empty, new car)	1,040 /1,020 mm
Wheelbase	10,000 mm
Distance between end axles	26,200 mm
Wheel diameter	920 mm
Brake blocks	Jurid 816 M
Brake Type	KE-GP-A(K)-2x10"
Parking brake	Operated from ground level
Buffer type	Category A, Stroke 105 mm
Screw coupling on the end of the unit	850 kN
Draw gear with draw hook on the end of the unit	1,000 kN
Draw gear in the middle of the unit	1,200 kN
Short crew coupling in the middle of the unit	1,200 kN
Automatic coupler adjustment (UIC 530-1)	No
Weight of empty wagon	Approx. 30.7 t
Maximum load weight	59.3 t
Maximum axle load	18.0 t
Loading length	Approx. 32,000 mm
Height of lower deck to rail level (empty wagon, new condition) for containers	1,180 mm
Height of lower deck to rail level (empty wagon, new condition) for vehicles	1,165 mm
Loading gauge	G1 EN 15273-2

The descriptions provided herein are for general information purposes only.

Laadrs | 2x2-axle open flat car carrier



Features

- 2 x 2 axle wagon is suitable for the carriage of the wagons, especially vans, on one deck.
- For a potential future reconstruction, the wagon is suitable in terms of underframe structure, wheelsets, brake efficiency and a running gear for the max. load of 20.0 t / axle.
- Wagon has a structure prepared to equip by a side handrail.
- Fixed stainless steel bridge consoles are between the units.
- The wagon design meets the requirements of TSI, EN, UIC standards and has TEN GE marking for traffic operation.

Capabilities

- The floor is able to withstand the vertical load of 1.0 t per each rubber tyre.
- Foldable flaps are designed to withstand max. wheel/tyre load of 2 t.
- The running surface of wagons and the fixing wheel chocks are hot dip galvanized to ensure the best anticorrosive protection.

Laadrs | 2x2-axle open flat car carrier



General parameters

Axle load	20.0 t / axle
Track gauge	1,435 mm
Running gauge	G1-TSI
Max. speed (unloaded)	120 km/h
Max. speed (loaded)	100 km/h
Climate conditions	T1-TSI
R_{min} (single wagon)	75.0 m
R_{min} (wagons in train)	150.0 m
Length over buffers	32,230 mm
Underframe length	2 x 15,175 mm
Loading length	30,990 mm
Loading height (except the wagon ends)	1,000 mm
Wheel diameter	840 mm
Tare weight	28.7 t

The descriptions provided herein are for general information purposes only.

Laaers L02A | 2x2 axle wagon, Series Laaers - open car carier

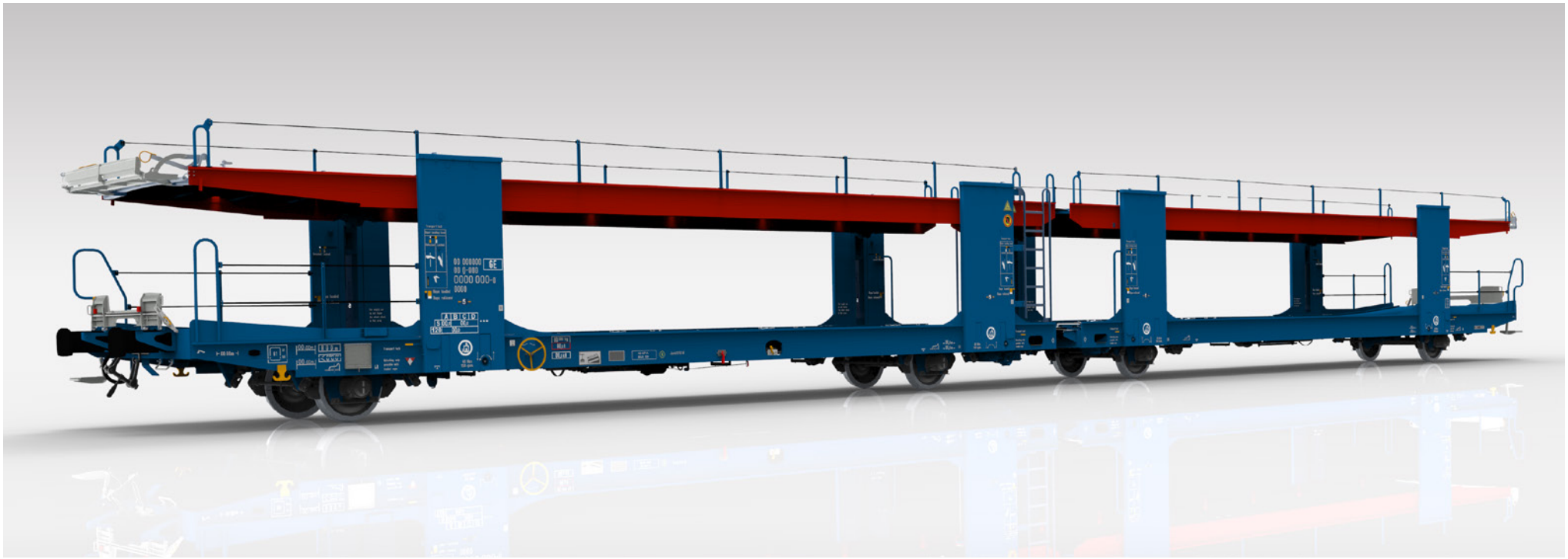

Features

- This wagon is designed for the transportation of automobiles and vans.
- The upper loading platform can be adjusted in increments of 75 mm from 1640 mm to 1940 mm final height. Lifting the upper loading platform is carried out with special cable winches which consist of:
- Overload clutch system assembled in the gear of the winch (in case of overload of the upper deck or lifting already blocked upper deck the drive is disconnected)
- Protection against loosing of the cable on the drum and on the pulleys (in case of lowering already blocked upper deck the drum drive is disconnected.
- Wagon can be used as a flat wagon thanks to lowering the upper deck to the height 1500 mm from rail.
- The running decks are treated with an anti-skid coating.
- This wagon is equipped with a staff safety railings on upper deck.
- Wagon can be equipped with brake pads (J816M) , CoFren (C810), and Frenoplast (FR513)
- This wagon is designed according to TSI, EN, Group Standards for EU traffic operation.
- Upper deck can be equipped with folding handrails 1.1 m high when unfolded.

Laaers L02A | 2x2 axle wagon, Series Laaers - open car carier for transportation of automobiles and vans

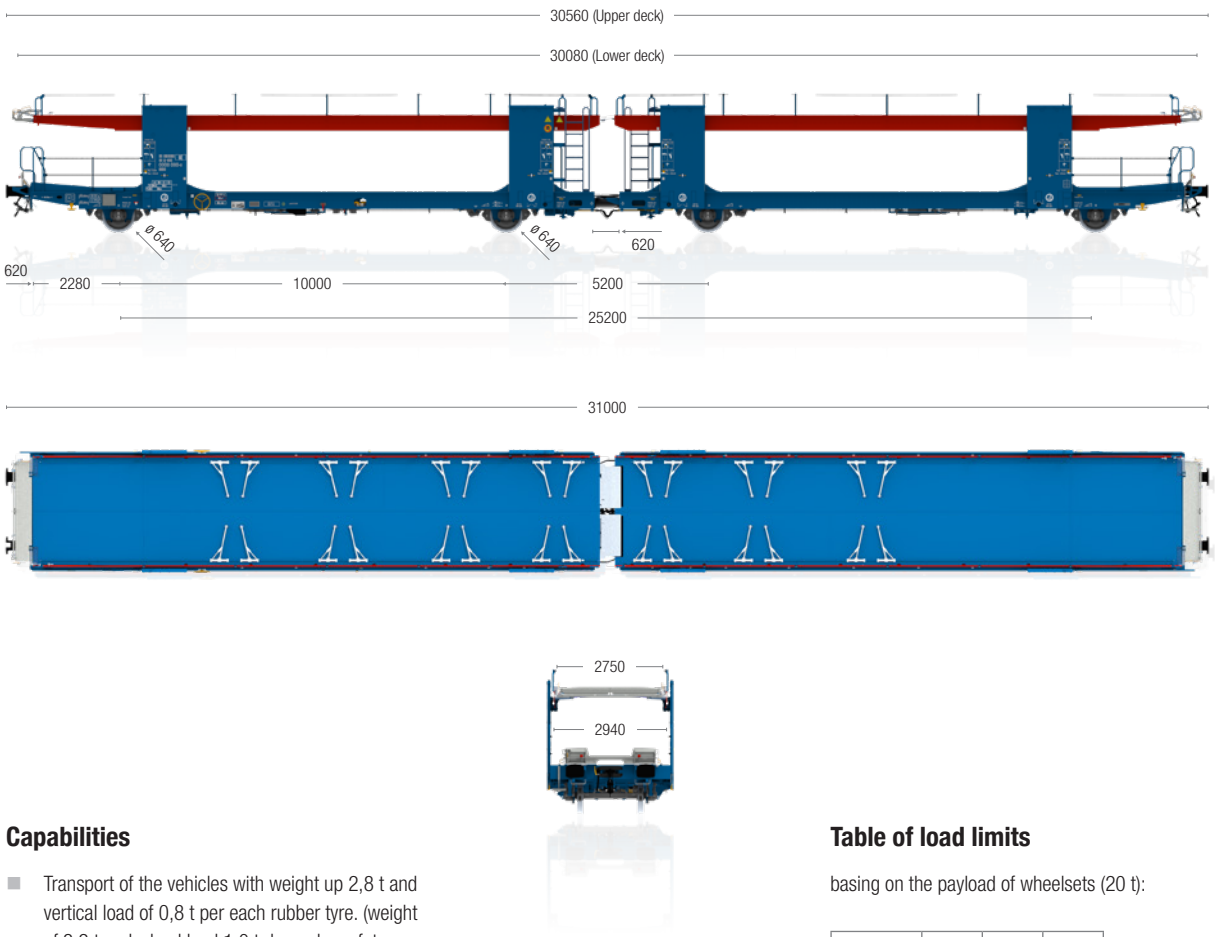

Capabilities

- Transport of the vehicles with weight up 2,8 t and vertical load of 0,8 t per each rubber tyre. (weight of 3,2 t and wheel load 1,0 t depends on future developments, agreements).
- The wagon is equipped with 56 wheel blockers operable by feet.
- Loading possibilities depending of the dimensions of the vehicles.

Table of load limits

basing on the payload of wheelsets (20 t):

	A	B	C
S	30 t	34 t	
120 km/h	00.0 t		

General parameters

Wagon length over buffers	31,000 mm
Underframe length	14,560 mm
Buffer / coupler axis height above ToR (empty, new car)	1,030 / 1,010 mm
Wheelbase	10,000 mm
Distance between end axles	25,200 mm
Wheel diameter	840 mm
Brake blocks	Jurid 816 M, Cosid 810, Frenoplast
Brake type	KE-GP-A(K)-2x10"
Parking brake	Operated from ground level
Buffer type	Category A, stroke 105 mm
Screw coupling on the end of the unit	850 kN
Draw gear with draw hook on the end of the unit	1,000 kN
Draw gear in the middle of the unit	1,200 kN
Short crew coupling in the middle of the unit	1,200 kN
Automatic coupler adjustment (UIC 530-1)	DAC depends on future developments, agreements, etc
Weight of empty wagon	Approx. 34.0 t*
Maximum load weight	34.0 t
Maximum axle load	20.0 t
Maximum load on the lower deck	17.0 t
Maximum load on the upper deck	17.0 t
Loading gauge	G1 EN 15273-2

The descriptions provided herein are for general information purposes only.

Laadgrs L04A | 2x2 axle wagon - open flat car carrier and container twin wagon

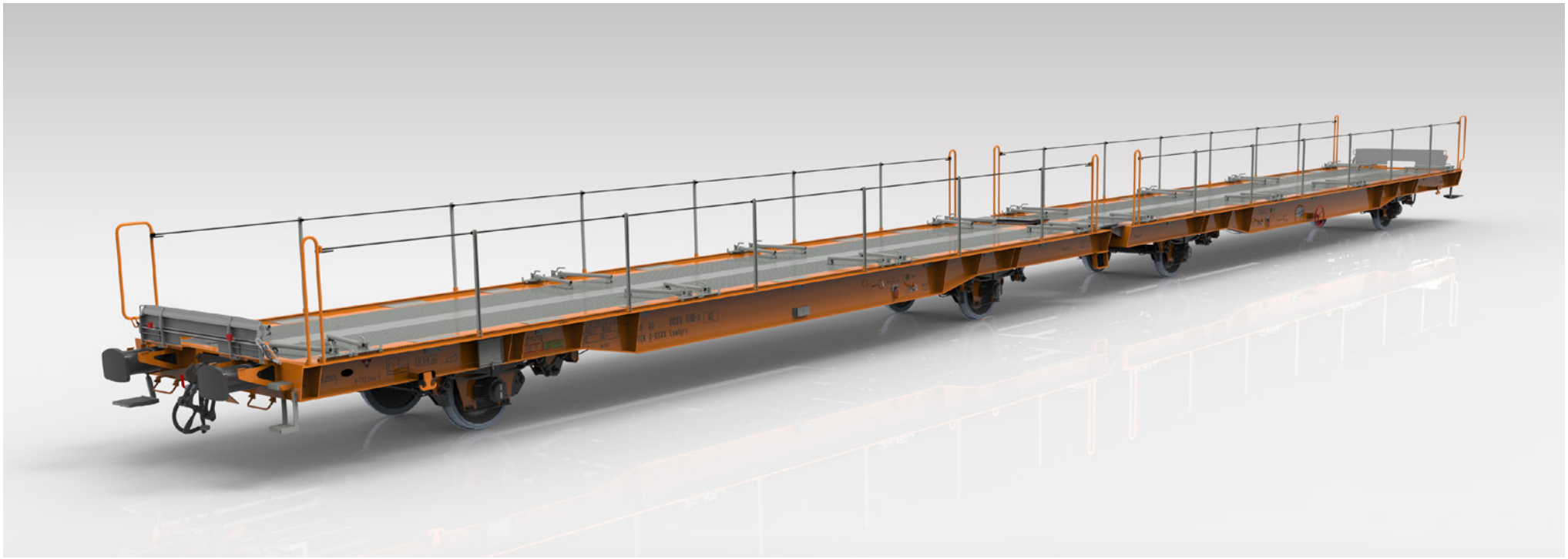

Features

- This wagon is designed for the transportation of automobiles, vans and containers.
- For transport of the vehicles wagon is equipped with 32 wheel chocks.
- Lower floor is designed in order to permit to drain rain water off and is made of galvanized grate bridging plates.
- The floor is able to withstand the vertical load of 1,0 t per each rubber tyre.
- For transport of the containers flip down spigots have to be installed.
- This wagon is designed according to TSI, EN, Group Standards for EU traffic operation.

Capabilities

- Loading possibilities depending of the dimensions of the vehicles.
- Transport of the vehicles with weight up 3,0 t. (3,2 t depends on future developments, agreements).
- Max. vertical wheel load up. to 1,0 t per each rubber tyre.
- The wagon is dedicated to transport of containers 20`; 30`; 40`; ac to ISO668. Wheel chocks has to be removed during transport of containers.
- Arrangement of containers acc. to UIC 571-4, attachment A drawing 3

Laadgrs L04A | 2x2 axle wagon - open flat car carrier and container twin wagon



Table of load limits

basing on the payload of wheelsets (22.5 t):

	A	B	C	D
S	33.3 t	41.3 t	49.3 t	59.3 t
120 km/h	00.0 t			

General parameters

Wagon length over buffers	33,000 mm
Underframe length	15,560 mm
Buffer / Coupler Axis Height above ToR (empty, new car)	1,040 / 1,020 mm
Wheelbase	10,000 mm
Distance between end axles	26,200 mm
Wheel diameter	920 mm
Brake blocks	C810
Brake type	KE-GP-A(K)-2x10"
Parking brake	Operated from ground level
Buffer type	Category A, stroke 105 mm
Screw coupling on the end of the unit	850 kN
Draw gear in the middle of the unit	1,200 kN
Short crew coupling in the middle of the unit	1,200 kN
Automatic coupler adjustment (UIC 530-1)	DAC depends on future developments, agreements, etc.
Weight of empty wagon	Approx. 30,7 t
Maximum load weight	59.30 t
Maximum Axle Load	22.50 t
Loading length	Approx. 32000 mm
Height of lower deck to rail level (empty wagon, new condition) for containers	1,180 mm
Height of lower deck to rail level (empty wagon, new condition) for vehicles	1165 mm
Loading gauge	G1 EN 15273-2

The descriptions provided herein are for general information purposes only.

Laaers L07A | 2x2-axle wagon, Series Laaers – open car carier



Features

- Laaers wagon type L07A is designed for the transportation of automobiles and vans on the standard lines of EU member states with a 1.435 mm track gauge as well as on lines in Spain with a 1.668 mm gauge.
- The design of the underframe is dedicated for having possibility of exchange the wheelsets acc. to scheme shown in the UIC leaflet 430-1.
- The wagon is equipped with a staff safety railing on the upper deck and wire mesh protection plates on the lower deck.
- The running decks are treated with an anti-skid coating.
- The upper loading platform can be fluently adjusted from 1500 mm from rail head up to 3350 mm for loading position. Lifting of the upper loading platform is carried out with special spindle system consisting of:
  - Overload clutch system assembled in the drive gear in case of overload of the upper deck when it is on the top or bottom position,
  - Special blocking device against self-lowering of upper deck,
  - Additional blocking devices protecting of the whole lifting system against self-lowering of upper deck during running of the wagon.
- This wagon is designed according to TSI, EN, Group Standards for GE traffic operation.

Laaers L07A | 2x2-axle wagon, Series Laaers – open car carier for transportation of automobiles and vans

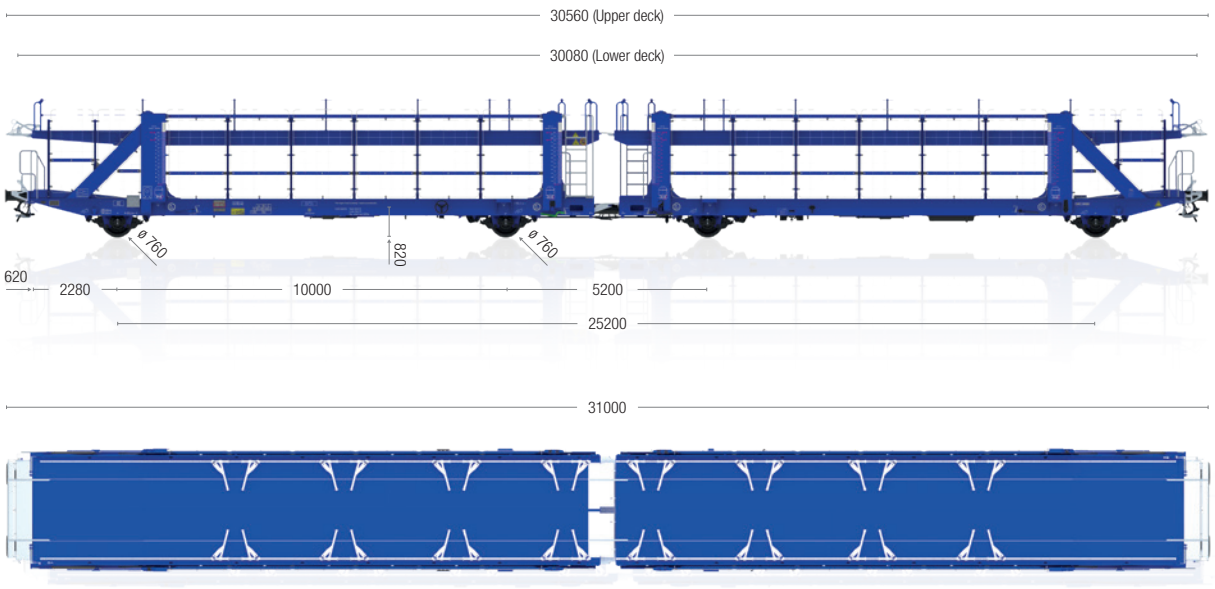



Capabilities

- The upper loading platform can be fluently adjusted from 1,500 mm from rail head up to 3,350 mm for loading position.
- Transport of the vehicles with weight up 2.8 t.
- Max. horizontal wheel force from the transported vehicle up. to 1.0 t.
- Loading possibilities depending of the dimensions of the vehicles.
- Wagon can be used as a flat wagon thanks to lowering the upper deck to the height 1,500 mm from rail.
- The wagon is equipped with 56 wheel blockers. The operator shall easily operate the wheel blocker with his feet.

Table of load limits

basing on the payload of wheelsets (18 t):

	A	B	C	D
S	30 t	34 t		
120 km/h	00.0 t			

General parameters

Wagon length over buffers	31,000 mm
Underframe length	14,560 mm
Buffer / coupler axis height above ToR (empty, new car)	1,040 / 1,020 mm
Wheelbase	10,000 mm
Distance between end axles	25,200 mm
Wheel diameter	760 mm
Brake blocks	Jurid 816 M
Brake Type	KE-GP-A(K)-2x10"
Parking brake	Operated from ground level
Buffer type	Category A, Stroke 105 mm
Screw coupling on the end of the unit	850 kN
Draw gear with draw hook on the end of the unit	1,000 kN
Draw gear in the middle of the unit	1,200 kN
Short crew coupling in the middle of the unit	1,200 kN
Automatic coupler adjustment (UIC 530-1)	No
Weight of empty wagon	Approx. 34 t*
Maximum load weight	34.0 t
Maximum axle load	18.0 t
Maximum load on the lower deck	17.0 t
Maximum load on the upper deck	17.0 t (18.0 t in flat wagon position)

The descriptions provided herein are for general information purposes only.

Laaers L08A | 2x2-axle wagon, Series Laaers – open car carier



Features

- Laaers wagon type L08A is designed for the transportation of automobiles and vans on the standard lines of EU member states with a 1,435 mm track gauge.
- The wagon is equipped with a staff safety railing on the upper and lower deck.
- The running decks are treated with an anti-skid coating.
- The upper loading platform can be fluently adjusted from 1,500 mm from rail head up to 3,350 mm for loading position.
- Lifting of the upper loading platform is carried out with special spindle system consisting of:
  - overload clutch system assembled in the drive gear in case of overload of the upper deck when it is on the top or bottom position,
  - special blocking device against self-lowering of upper deck,
  - additional blocking devices protecting of the whole lifting system against self-lowering of upper deck during running of the wagon.
- This wagon is designed according to TSI, EN, Group Standards for GE traffic operation.

Laaers L08A | 2x2-axle wagon, Series Laaers – open car carier for transportation of automobiles and vans

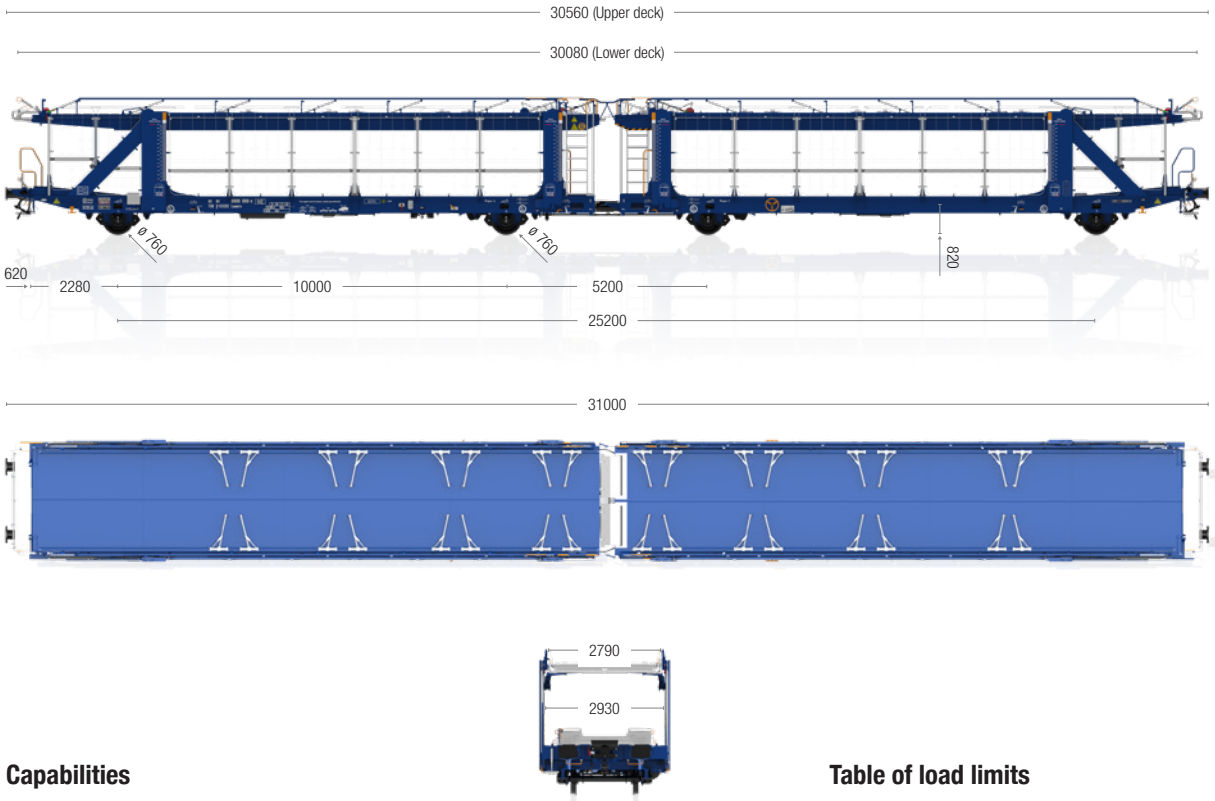

Capabilities

- The upper loading platform can be fluently adjusted from approx. 1,500 mm from rail head up to 3,350 mm for loading position.
- Transport of the vehicles with weight up 2.8 t.
- Max. horizontal wheel force from the transported vehicle up. to 1.0 t.
- Loading possibilities depending of the dimensions of the vehicles.
- Wagon can be used as a flat wagon thanks to lowering the upper deck to the height approx. 1,500 mm from rail.
- The wagon is equipped with 56 wheel blockers. The operator shall easily operate the wheel blocker with his feet.

Table of load limits

basing on the payload of wheelsets (18 t):

	A	B	C	D
S	30 t	34 t		
120 km/h	00.0 t			

General parameters

Wagon length over buffers	31,000 mm
Underframe length	14,560 mm
Buffer / coupler axis height above ToR (empty, new car)	1,040 / 1,020 mm
Wheelbase	10,000 mm
Distance between end axles	25,200 mm
Wheel diameter	760 mm
Brake blocks	Jurid 816 M
Brake type	KE-GP-A(K)-2x10"
Parking brake	Operated from ground level
Buffer type	Category A, stroke 105 mm
Screw coupling on the end of the unit	850 kN
Draw gear with draw hook on the end of the unit	1000 kN
Draw gear in the middle of the unit	1200 kN
Short crew coupling in the middle of the unit	1200 kN
Automatic coupler adjustment (UIC 530-1)	No
Weight of empty wagon	Approx. 34.0 t*
Maximum load weight	34.0 t
Maximum axle load	18.0 t
Maximum load on the lower deck	17.0 t
Maximum load on the upper deck	17.0 t (18.0 t in flat wagon position)

The descriptions provided herein are for general information purposes only.

Laads L09A | 2x2-axle flatbed wagon with lowered floor



Features

- The wagon design meets the requirements of TSI, EN, UIC standards and has TEN GE marking for traffic operation.
- The low-set floor allows for the transport of high profile vehicles
- The wagon is equipped with 32 wheel stoppers to secure the vehicles.
- Storage rooms for unused wheel stoppers are located under the wagon deck. This ensures that the deck is free of wheel stoppers during loading.
- The wagon has 16 anchorage points for additional securing of the transported vehicles.
- Each wagon unit is equipped with two axles with parabolic springs and double link suspen-sion according to EN 16235 (UIC 517) upgraded with a longitudinal displacement dampers

Capabilities

- The floor, bridge and movable flaps are capable of carrying a load of 50kN exerted over the surface of 220 cm.
- Water, snow and dirt are not able to close the sockets of the anchor points.
- One anchor point is capable of supporting a force of 5t.
- Wagon temperature range is T2 + T3 acc. to TSI requirements (No 321/2013/EU)

Laads L09A | 2x2-axle flatbed wagon with lowered floor, Series Laads, for high profile vehicles transport

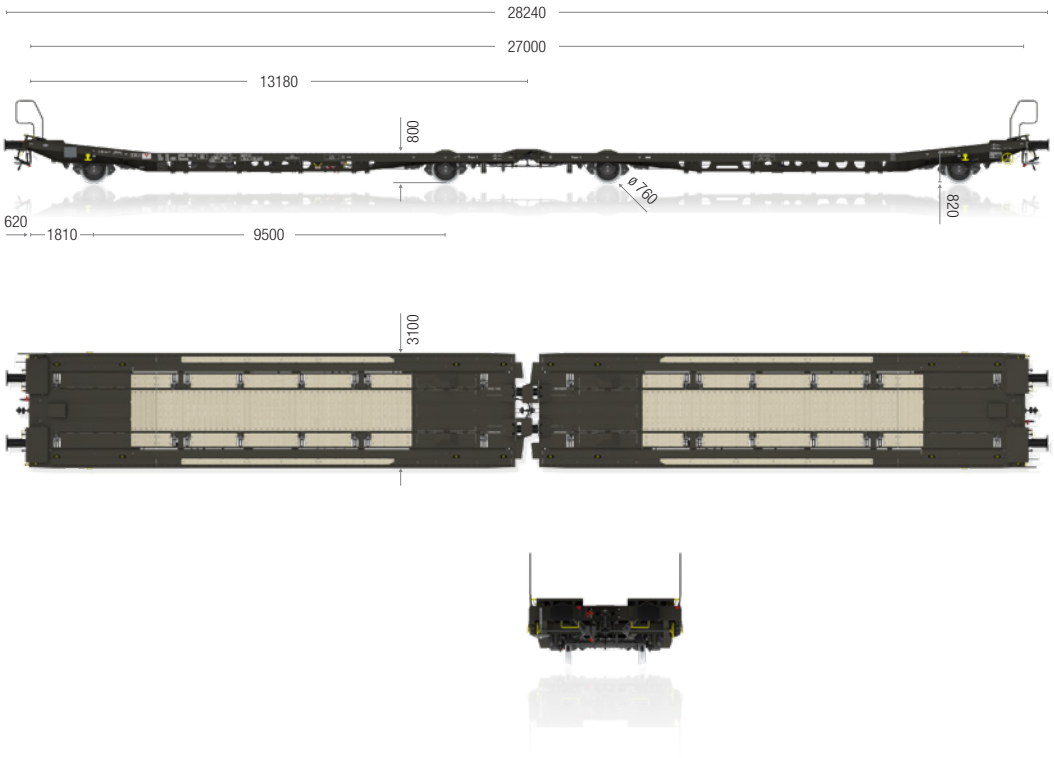

Table of load limits

basing on the payload of wheelsets (18 t):

	A	B	C	D
S	39 t	47 t		
120 km/h	00.0 t			

General parameters

Wagon length over buffers	28,240 mm
Underframe length	13,180 mm
Wheelbase	9,500 mm
Distance between end axles	23,380 mm
Wheel diameter	760 mm / 18t
Height of lower part of deck to rail level	800 mm
Loading length	Approx. 27,000mm
Brake blocks	Jurid 816 M
Brake type	KE-GP-A (K)
Parking brake	Operated from ground level
Buffer type	Category A, hub 105 mm
Screw coupling on the end of the unit	850 kN
Draw gear with draw hook on the end of the unit	1,000 kN
Draw gear and short screw coupling in the middle of the unit	1,200 kN
Short crew coupling in the middle of the unit	1,200 kN
Automatic coupler adjustment (UIC 530-1)	No
Weight of empty wagon	25.00 t
Maximum load weight	47.00 t
Maximum axle load	18.00 t
Shunting hump	Design category F-1. but possible only in empty condition
Loading gauge	G1, Gl1 EN 15273-2

The descriptions provided herein are for general information purposes only.

JNA UK 42.9 m³ | 4-axle open box wagon



Features

- This open box wagon was designed specifically for the transportation of spoil/ballast from rail renewal sites based on a product density of 1,480 kg/m³. However, it can easily be adapted to meet any bulk handling requirements.
- The length, height and axle load can be changed to vary the volume or tonnage per unit length to suit.
- Unloading of the wagon is carried out by mechanical excavators.
- This wagon is designed according to NTSN, EN, Group Standards for UK traffic operation.

Capabilities

- Simple solution to bulk handling operations.
- Wagon dimensions can be adjusted to meet specific customer requirements.
- “Clean-out” hatches can be fitted in the sides of the box.
- Track friendly bogies limit track access charges.

JNA UK 42.9 m³ | 4-axle open box wagon

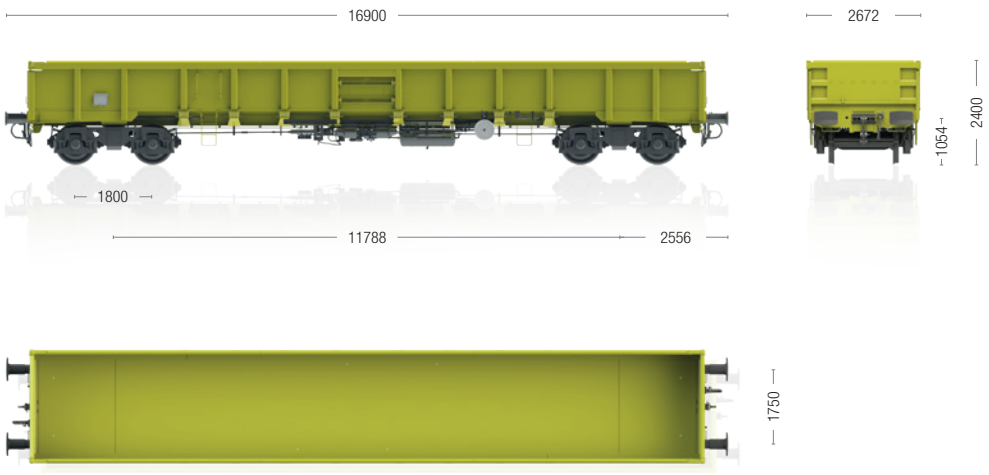

General parameters

Axle load	22.5 t / axle
Track gauge	1,435 mm
Loading gauge	W6a
Brake regime	UK
Brake type	GP-A-K
Max. speed at 90.0 t	60 mph (100 km/h)
Max. speed (unloaded)	75 mph (120 km/h)
Climate condition	T_{RIV}
R_{min} (coupled/single)	70.0 m / 55.0 m
Length over buffers	16,900 mm
Tare weight	~ 26.5 t
Payload	~ 63.5 t
Loading opening	2,430 x 15,580 mm
Internal high	1,133 mm
Material of box	Standard steel
Bogie type	AM III
Wheel diameter	920 mm
Bogie wheel base	1,800 mm

The information provided herein is for general information purposes only.

JNA 60 m³ | 4-axle open box wagon for UK



Features

- Open box wagon with approximately 60 m³ capacity was designed for 'level fill' of bulk products. However, it can easily be adapted to meet any bulk handling requirements.
- The length, height and axle load can be changed to vary the volume or tonnage per unit length to suit.
- Unloading of the wagon is carried out by mechanical excavators.
- This wagon is designed according to TSI, EN, Group Standards for UK traffic operation.

Capabilities

- Simple solution to bulk handling operations.
- Wagon dimensions can be adjusted to meet specific customer requirements.
- "Clean-out" hatches can be fitted in the sides of the box.
- Track friendly bogies limit track access charges.

JNA 60 m³ | 4-axle open box wagon for UK

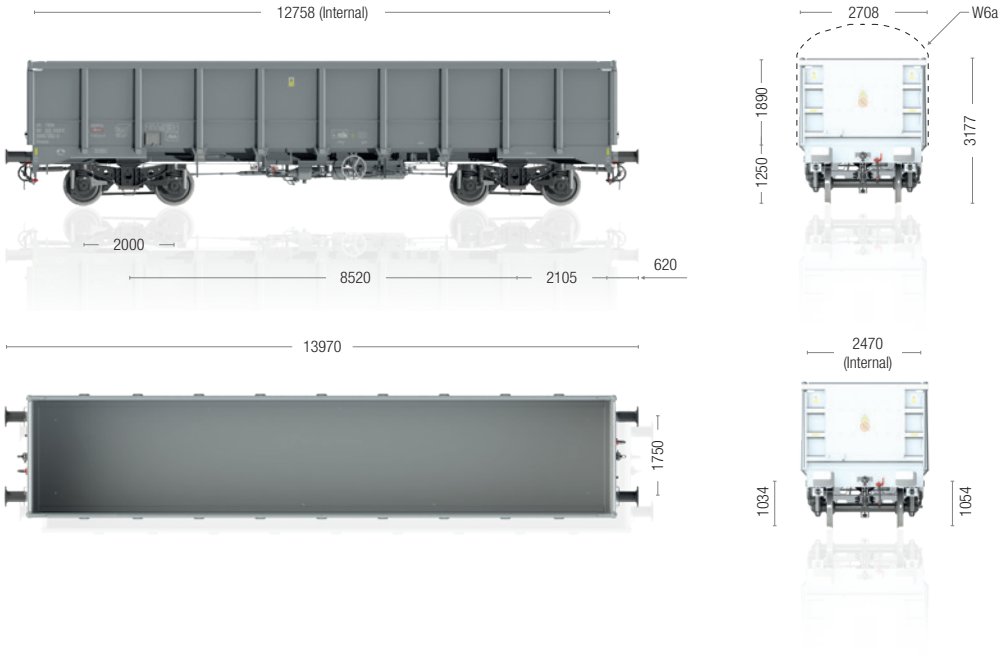

General parameters

Axle load	25.4 t / axle
Track gauge	1,435 mm
Loading gauge	W6a
Brake regime	UK
Brake type	GP (K)
Max. speed at 101.6 t	100 km/h (60 mph)
Max. speed at (unloaded)	120 km/h (75 mph)
Climate condition	T1
R_{min} (coupled in train)	70.0 m
Length over buffers	13,970 mm
Tare weight	23.7 t
Payload	~ 77.9 t
Loading opening	2,470 x 12,758 mm
Internal height	1,890 mm
Material of box	Standard steel
Bogie type	LN25 (Axiom Rail)
Wheel diameter	840 mm
Bogie wheel base	2,000 mm

The descriptions provided herein are for general information purposes only.

Eamnos 57 m³-E06A & E06B | 4-axle open box wagon



Features

- This four-axle box wagon is suitable for the transportation of aggregate and ore products.
- Wagon is loaded from the top. The products are unloaded using mechanical buckets.
- The wagon design meets the requirements of TSI, EN, UIC standards and has TEN GE marking for traffic operation.
- The underframe headstocks comply with EN 12663-2 and UIC 530-1 provisions for the mounting of Automatic Couplers.

Capabilities

- With the wagon length over buffers of 11.300 mm and a potential payload of up to 72.0 t (depending on the selected wall thicknesses), it allows for the highest efficiency in the transport of goods.
- Wagon cleaning is possible by doors on each side wall.
- The wagon is equipped with one weighing valve so partial loading is possible.
- The use of High Strength steel increases robustness even when exposed to the heaviest shocks while loading or unloading.

Eamnos 57 m³-E06A & E06B | 4-axle open box wagon

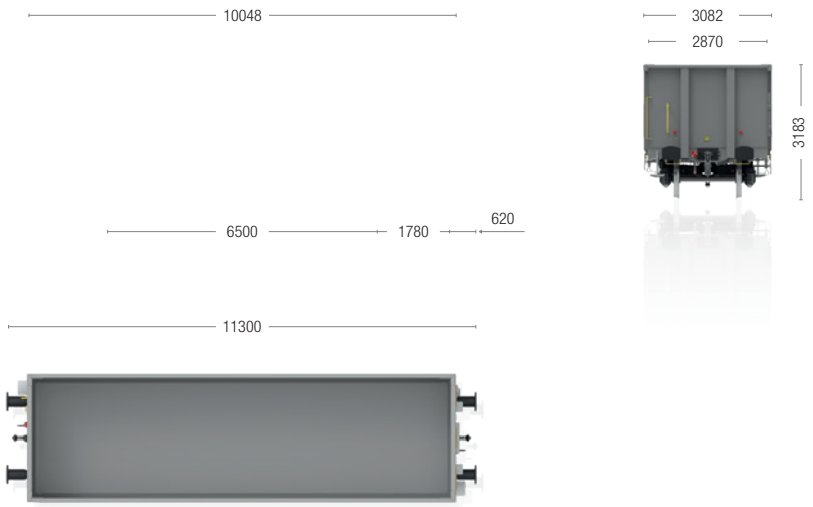

General parameters

	E06A	E06B
Axle load	22.5 t / axle	22.5 t / axle
Track gauge	1,435 mm	1,435 mm
Loading gauge	G1-TSI	G1-TSI
Brake regime	“S”	“S”
Brake shoe	C810	C810
Max. speed at 90.0 t	100 km/h	100 km/h
Max. speed at (unloaded)	120 km/h	120 km/h
Climate condition	T1	T1
R_{min} (single wagon)	35.0 m	35.0 m
Tare weight	19.0 t	18.0 t
Payload	71.0 t	72.0 t
Internal length	9.9 m	9.9 m
Loading area	26.2 m^2	26.2 m^2
Floor plate	8 mm - HARDOX type	6 mm – HARDOX type
Box plates	6 mm - S700MC	5 mm – S700MC
Bogie type	Y25Lsd-KP1(V)	Y25Lsd-KP1(V)

The descriptions provided herein are for general information purposes only.

Eamnos 72 m³-E04E | 4-axle open box



Features

- This four-axle box wagon is suitable for transportation of coal, ore, gravel and sand.
- Wagon is loaded from the top. Unloading is carried on turning and side and side wagon tipper or by means of buckets.
- The wagon design meets the requirements of TSI, EN, UIC standards and has TEN GE marking for traffic operation.

Capabilities

- Wagon cleaning is possible by small doors on each side wall.
- Wagon is equipped with one weigh valve – partial loading possible.

Eamnos 72 m³-E04E | 4-axle open box

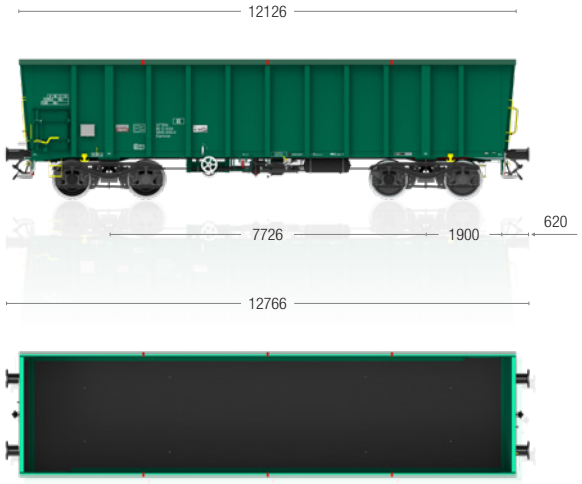



General parameters

Axle load	22.5 t / axle
Track gauge	1,435 mm
Loading gauge	G1-TSI
Brake regime	“S”
Brake shoe	C810
Max. speed at 90.0 t	100 km/h
Max. speed at (unloaded)	120 km/h
Climate condition	T1
R_{min} (single wagon)	35.0 m
Tare weight	19.0 t
Payload	71.0 t
Internal length	11.3 m
Loading area	32.2 m^2
Floor plate	5 mm - HARDOX type
Box plates	5 mm - S700MC
Bogie type	Y25Lsd-K/-K-V or Y25Lsd-KP1

The descriptions provided herein are for general information purposes only.

Eanos 82.5 m³ | 4-axle open box wagon



Features

- This open-top box wagon is suitable for transportation of weather resistant materials mainly of bulk goods (coal, ore, stone, briquettes, scrap) as well as piece cargoes.
- The wagon can be loaded via top box opening or via four openings (1,800 x 1,800 mm) after double wings doors release.
- The wagon design meets the requirements of TSI, EN, UIC standards and has TEN GE marking for traffic operation.

Capabilities

- Wagon can be unloaded at side by rotary tipplers via top box opening or mechanical/manually via four openings (1,800 x 1,800 mm) after double wings doors release.

Eanos 82.5 m³ | 4-axle open box wagon

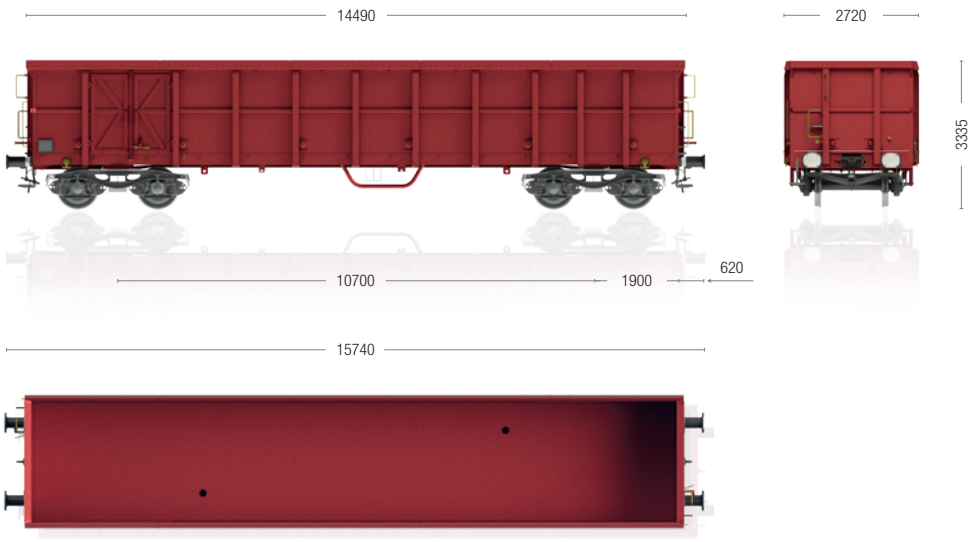

General parameters

Axle load	22.5 t / axle
Track gauge	1,435 mm
Loading gauge	G1-TSI
Brake regime	“S”
Brake type	GP (K)
Max. speed at 90.0 t	100 km/h
Max. speed at (unloaded)	120 km/h
Climate condition	T1
R_{min} (single wagon)	35.0 m
Length over buffers	15,740 mm
Tare weight	~ 24.0 t
Payload	~ 66.0 t
Loading opening	14,490 x 2,720 mm
Loading area	39.4 m^2
Loading height	1,235 mm
Floor plate	6 mm
Box plates	4 and 6 mm
Bogie type	Y25Ls1-K

The descriptions provided herein are for general information purposes only.

Rils-y 653 | 4-axle flat wagon

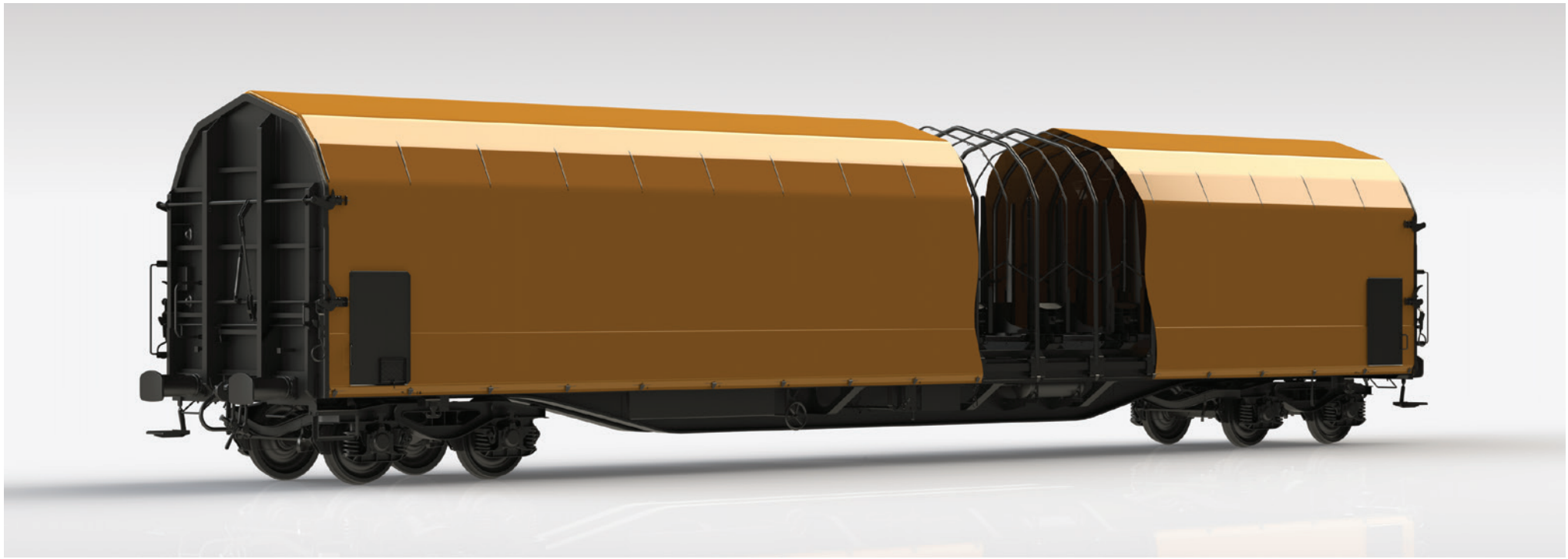

Features

- This flat wagon is suitable for transport of wire coils which need to be protected against weather conditions.
- The wagon is equipped with the saddle frame to support the wire coils. Contact area of saddle is covered with 35 mm oak wood. Saddle frame on sides is equipped with 6 pairs of stanchions – totally 24 stanchions.
- Contact area of stanchions is covered with plastic.
- The wagon design meets the requirements of TSI, EN, UIC standards and has TEN GE marking for traffic operation.

Capabilities

- Wire coils can be loaded in two layers (13 pcs + 12 pcs) from the top by crane.
- First layer of wire coils is placed to the saddle frame and second layer loaded over first layer.
- Wire coils are fixed from sides by laterally adjustable stanchions in 50 mm shift.

Rils-y 653 | 4-axle flat wagon

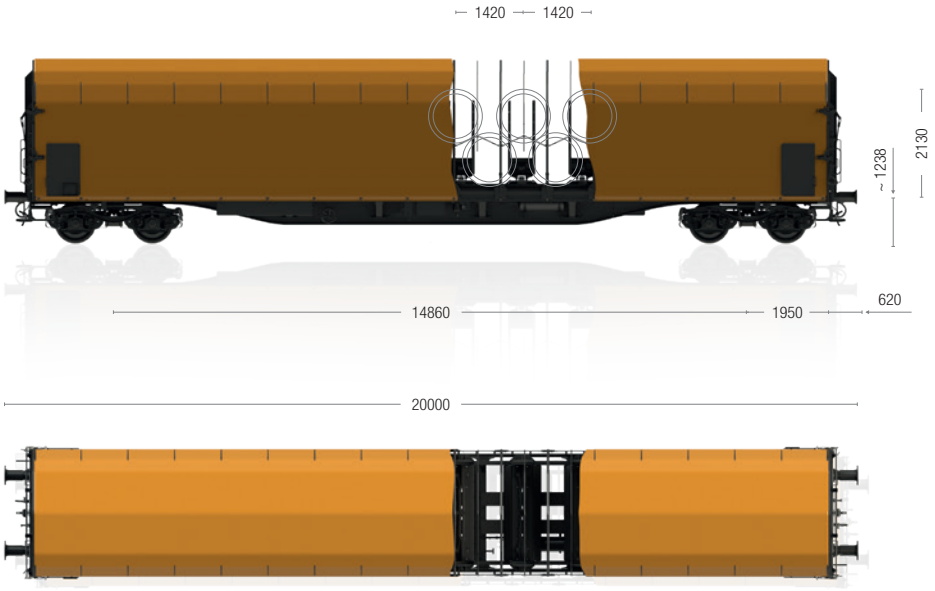

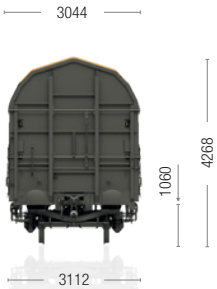

General parameters

Axle load	22.5 t / axle
Track gauge	1,435 mm
Loading gauge	G1-TSI
Brake regime	“S”
Brake type	GP-A (K)
Max. speed for 90.0 t	100 km/h
Max. speed (unloaded)	120 km/h
Climate condition	T1
R_{min} (single wagon)	50.0 m
Length over buffers	20,000 mm
Loading length (between end walls)	18,510 mm
Loading width saddles	2,200 / 1,150 mm
Loading width stanchions	2,400 / 1,200 mm
Tare weight	max. 30.0 t
Payload	~ 60.0 t
Loading height saddle supports seating	1,200 mm from T.O.R.
Bogie type	Y25Ls1-K

The descriptions provided herein are for general information purposes only.

Loading scheme

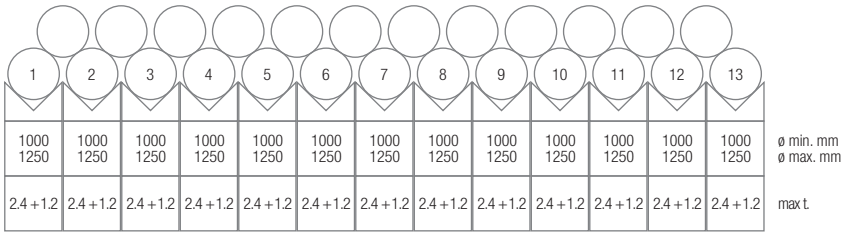

Hbbillns | 2-axle covered wagon



Features

- Two-axle covered wagon designed for transportation large-volume and palletized goods. The transported goods are protected against weather conditions.
- Wagon is loaded from both side.
- The wagon (“II”) is equipped with an intermediate wall system.
- The wagon design meets the requirements of TSI, EN, UIC standards and has TEN GE marking for traffic operation.

Capabilities

- Great loading space is accessible from ramps on both sides by industrial trucks.
- Whole wagon space could be divided with intermediate wall into separate loading sections.
- Intermediate wall serve also as fixation of transported load against longitudinal movement during transport operations.
- Wagon is equipped with weigh valves – partial loading possible.

Hbbillns | 2-axle covered wagon





General parameters

Axle load	22.5 t / axle
Track gauge	1,435 mm
Loading gauge	G2/PC400
Brake regime	“S”
Brake shoe	Jurid 816M
Max. speed at 90.0 t	100 km/h
Max. speed at (unloaded)	120 km/h
Climate condition	T1
R_{min} (single wagon)	60.0 m
Tare weight	16.5 t
Payload	28.5 t
Internal length	14,635 m
Loading area	38.3 m^2

The descriptions provided herein are for general information purposes only.

Habbii(ll)ns 352 | 4-axle sliding wall wagon



Features

- This covered multi-purpose freight wagon is used for transportation of big volume goods as well as for palletised goods. The transported goods are protected against atmospheric agents.
- The wagon (“ll”) is equipped with an intermediate wall system. Considered are 4 pcs of intermediate walls as optional order.
- The wagon design meets the requirements of TSI, EN, UIC standards and has TEN GE marking for traffic operation.

Capabilities

- The side walls are easy manipulated by one person and they provide possibility that 50% of the wagon can be opened.
- Great loading space is accessible from ramps on both sides by industrial trucks.
- With special crane equipment it is possible to load the wagon from the top due to a narrow roof beam.
- Whole wagon space could be divided with intermediate walls into smaller separate loading sections.
- Intermediate walls serve also as fixation of transported load against longitudinal movement during transport operations.

Habbii(ll)ns 352 | 4-axle sliding wall wagon

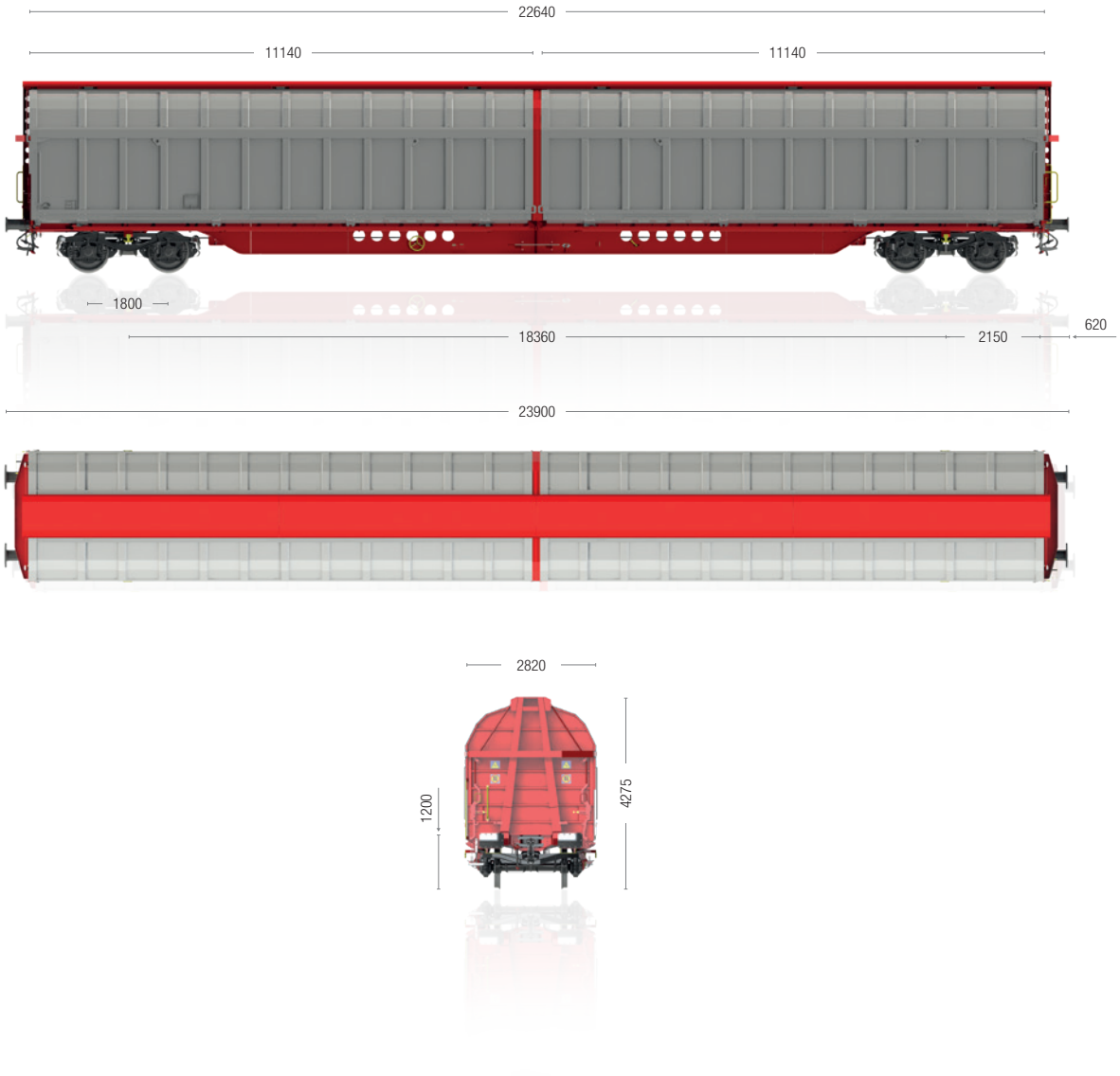

General parameters

Axle load	22.5 t / axle
Track gauge	1,435 mm
Loading gauge	G1-TSI
Brake regime	“S”
Brake type	GP-A (K)
Max. speed at 100.0 t	100 km/h
Max. speed (unloaded)	120 km/h
Climate condition	T1
R_{min} (single wagon)	60.0 m
Length over buffers	23,900 mm
Loading length	22,640 mm
Loading width	2,820 mm
Loading area (ll)	63.3 m^2 (62.05 m^2)
Wagon volume (ll)	170.0 m^3 (168.7 m^3)
Tare weight (ll)	~ 27.4 t (~ 28.8 t)
Payload (ll)	~ 62.6 t (~ 62.2 t)
Floor height	1,200 mm
Bogie type	BA 629.4 (K)
Number of euro pallets	63

The descriptions provided herein are for general information purposes only.

Habbii(ll)ns (Habbiins)-H01A | 4-axle covered wagon



Features

- The covered multipurpose 4-axle wagon is designed for transportation of large volume goods as well as palletized goods.
- The aluminium walls protect against atmospheric conditions.
- The wagon can be equipped with internal sliding partition walls.
- The wagon design meets the requirements of TSI, EN, UIC standards and has TEN GE marking for traffic operation.

Capabilities

- Easy operation of the side walls by one person from ground and ramp level.
- Operation of the side walls from all 4 corners.
- Partition walls assure convenient accommodation of the loading space.
- Easy operation of the partition walls by one person.

Habbii(ll)ns (Habbiins)-H01A | 4-axle covered wagon



General parameters

Axle load	25.0 t / axle
Track gauge	1,435 mm
Loading gauge	G1-TSI
Brake regime	“S”
Max. speed at 90.0 t	100 km/h
Max. speed at (unloaded)	120 km/h
Climate condition	T1
R_{min} (single wagon)	60.0 m
Tare weight	28,8 t (with 5 sliding walls), 27,4 t (without sliding walls)
Payload	71,2 t (with 5 sliding walls), 72,6 t (without sliding walls)
Internal length	22,000 mm
Internal width	2,840 mm
Internal height	2,800 mm
Door opening	10,820 mm
Bogie type	Y25

The descriptions provided herein are for general information purposes only.

Tanoos 123 m³ | 4-axle biomass (wooden pellets) hopper wagon for UK



Features

- The wagon is suitable for the carriage of biomass (wooden pellets) in four hopper compartments of a total volume of 123 m^3.
- Wagon has the pneumatic equipment for operating 4 discharging clam shell doors. The wagon loading aperture is fitted with pneumatically controlled waterproof roof.
- The doors and roof are operated pneumatically in manual or auto mode.
- Compressed air to operate the doors is taken from the train “second pipe” or from a site plug-in supply.
- The system is fitted with indicators to identify the doors application status.
- The wagon is designed according to NTSN, EN and Group Standards for UK traffic operation.

Capabilities

- Discharge equipment allows unloading between the rails on straight track while the wagon is standing or in motion.
- An unauthorized interference with control system is prevented mechanically by the unique safety keys. One safety key is for the roof control and by the second safety key the discharging doors are controlled.
- The roof and discharging doors are triggered by the magnets fitted at trackside at the loading and unloading stations.

Tanoos 123 m³ | 4-axle biomass (wooden pellets) hopper wagon for UK

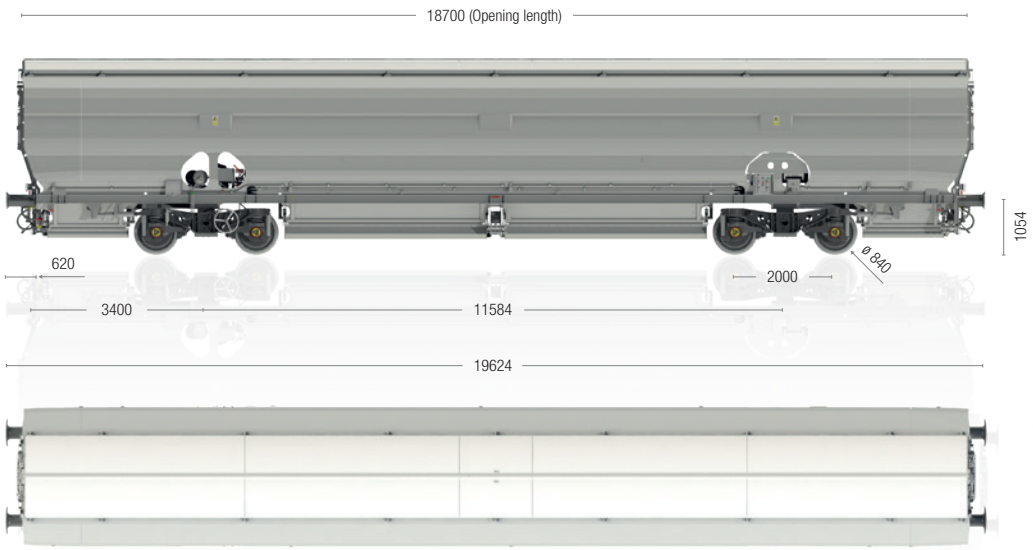



General parameters

Axle load	25.4 t
Track gauge	1,435 mm
Running gauge	W6a
Max. speed (unloaded)	120 km/h (75 mph)
Max. speed (loaded)	100 km/h (60 mph)
Climate conditions	T1-TSI
R_{min}	75.0 m
Length over buffers	19,624 mm
Length over headstocks	18,384 mm
Volume	123.0 m^3
Slope angle	40°
Product density	650.0 kg/m^3
Material of box	Carbon steel
Tare weight	29.0 t
Bogie type	LN25 with integrated brake
Wheel Diameter	840 mm

The descriptions provided herein are for general information purposes only.

Facnps 48 m³-F11A | 4 axle aggregate hopper wagon



Features

- This four-axle box wagon is suitable for transportation of aggregate
- The wagon design meets the requirements of TSI, EN, UIC standards and has TEN GE marking for traffic operation
- Unloading direction – to the conveyor, between the rails, out of the rails

Capabilities

- Wagon is equipped with mechanically operated bottom flaps
- The flaps are individually operated, independent of each other
- Wagon is equipped with two weighing valves

Facnps 48 m³-F11A | 4 axle aggregate hopper wagon

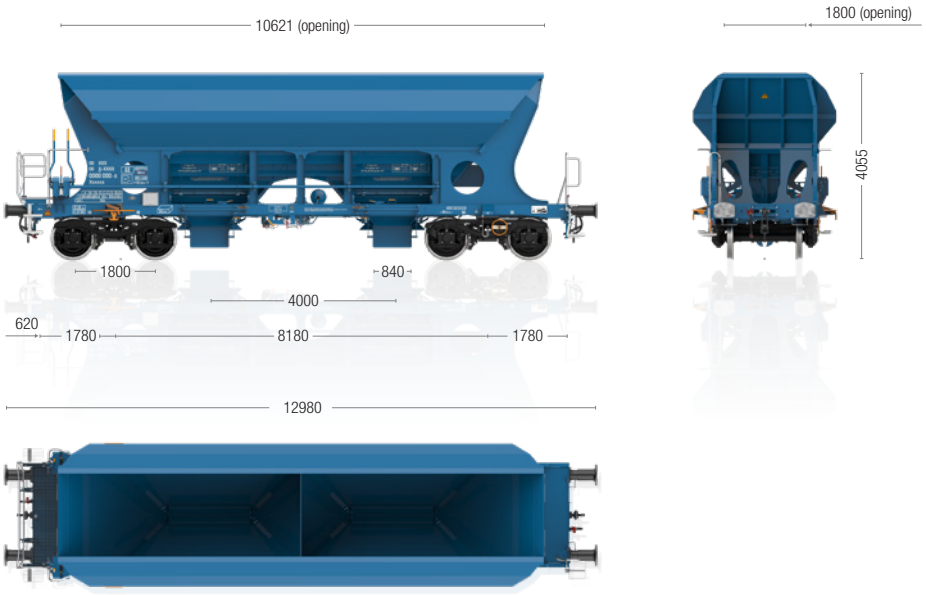

General parameters

Axle load	22.5 t / axle
Track gauge	1,435 mm
Running gauge	G1-TSI
Brake regime	"S"
Brake shoe	C810
Max. speed at 90 t	100 km/h
Max. speed when empty	120 km/h
Climate condition	T1
R_{min} (single wagon)	75.0 m
Tare weight	20.6 t
Payload	69.4 t
Capacity	48.0 m^3
Bottom aperture	840 mm
Bogie type	Y25 Ls(s)1-K(V)

The descriptions provided herein are for general information purposes only.

Faccns 49 m³ | 4-axle hopper wagon



Features

- This self-discharging open hopper wagon is suitable for the transportation of weather resistant bulk materials and aggregates.
- The wagon is equipped with a pneumatic control system for discharging product by means of two bottom doors to the side of the rails. The system allows the operator to be able to control the flow of material during discharge.
- The cylindrical doors are operated by four pneumatic cylinders with a mechanical emergency override system by way of a hand tool.
- The wagon design meets the requirements of TSI, EN, UIC standards and has TEN CW marking for traffic operation.
- The underframe complies with EN 12663-2 and UIC 530-1 provisions for mounting of the Automatic Coupler.

Capabilities

- The unloading operation of the wagon is possible from both sides.
- The parts exposed to excessive wear are made of wear resistant steel.
- The wagon is equipped with two weighing valves.

Faccns 49 m³ | 4-axle hopper wagon

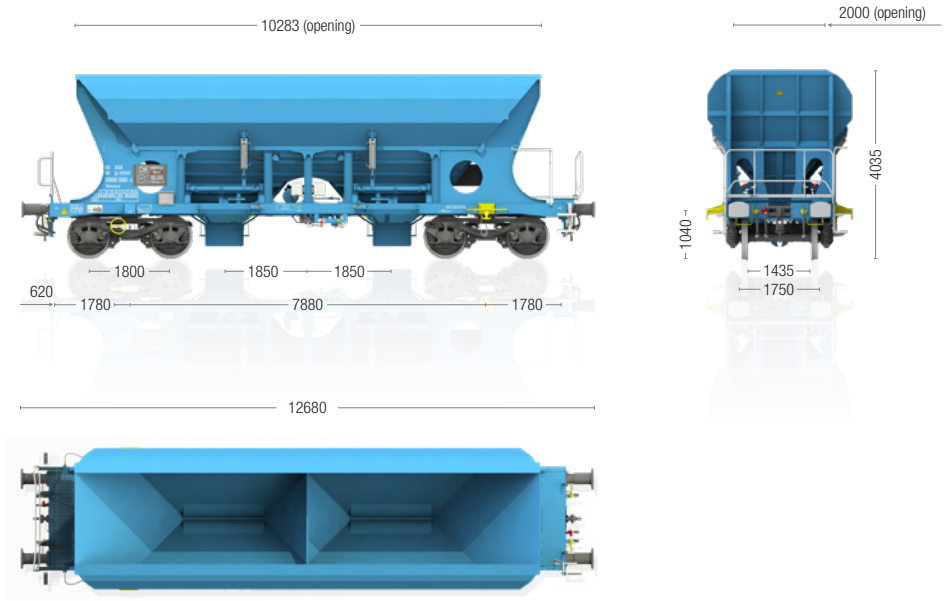

General parameters

Axle load	22.5 t / axle
Track gauge	1,435 mm
Running gauge	GC (G2+GI1) TSI
Brake regime	“S”
Brake type	GP-A (K)
Max. speed - up to 14,5 t axle load or empty	120 km/h
Max. speed - loaded	100 km/h
Climate condition	T1 - TSI
R_{min} (single wagon)	75.0 m
Length over buffers	12,680 mm
Tare weight	21,0 t
Payload	69,0 t
Capacity	49.0 m^3
Width of loading opening	2,000 mm
Bogie type	Y25Lsdi(f)-KC1

The descriptions provided herein are for general information purposes only.

Fanpps 55 m³-F07C | 4 axle aggregate hopper wagon



Features

- This four-axle box wagon is suitable for transportation of aggregate and sand
- The wagon is designed to use on the UK market and meets the requirements of TSI
- Unloading direction – between the rails only

Capabilities

- Wagon is equipped with pneumatically operated bottom doors
- The bottom doors are individually operated, independent of each other
- The bottom doors are equipped with flow control system
- Wagon is equipped with two weighing valves

Fanpps 55 m³-F07C | 4 axle aggregate hopper wagon



General parameters

Axle load	25.4 t / axle
Track gauge	1,435 mm
Loading gauge	W6a
Brake regime	"S"
Brake shoe	TMD804
Max. speed at 101,6 t	100 km/h (60 mph)
Max. speed at 25t (unloaded)	120 km/h (75 mph)
Climate condition	T1
R_{min} (coupled in train)	75.0 m
Tare weight	23.2 t
Payload	78.4 t
Capacity	55.0 m^3
Body plates	4 mm top, 5mm bottom –S355J2W
Bogie type	LN25

The descriptions provided herein are for general information purposes only.

Falns 184 77 m³ | 4-axle hopper wagon



Features

- This self discharging open hopper wagon is suitable for transportation of weather resistant materials mainly limestone.
- Fast unloading is achieved by side unloading of the four doors. All four doors are operated hydraulically. Power is accumulated from a wheel set hydraulic pump. For emergency operation the wagon is equipped with a manually operated pump from the platform.
- The wagon is designed according to TSI, EN, UIC for RIV and TEN RIV traffic operation.

Capabilities

- Two possible door width openings - 3,750 or 4,300 mm.
- The command of wagon discharging is possible from both sides of the wagon.
- The doors can be operated through three open or close operations using stored energy from a hydraulic storage pump.
- Tightness of doors – a grain >1 mm.

Falns 184 77 m³ | 4-axle hopper wagon

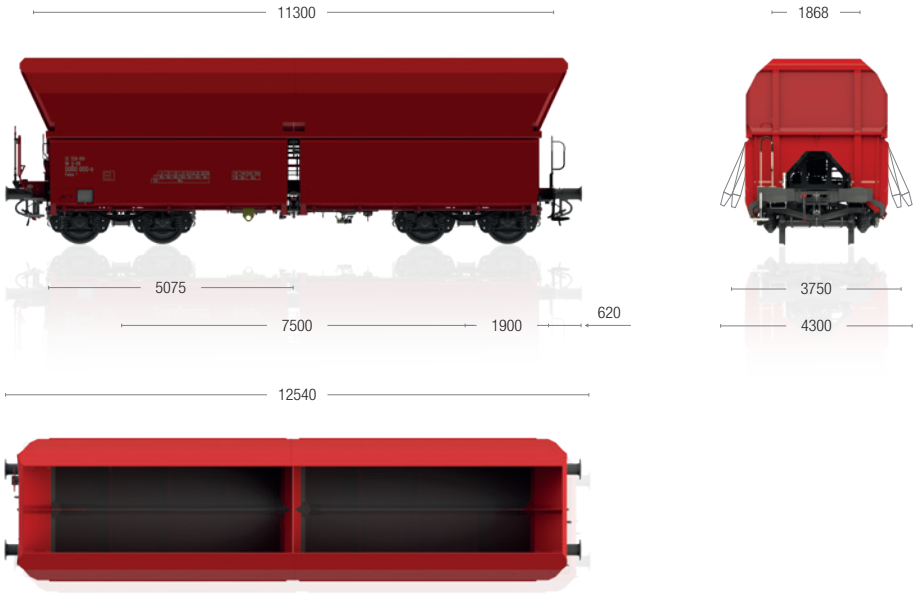

General parameters

Axle load	22.5 t / axle
Track gauge	1,435 mm
Loading gauge	G1-TSI
Brake regime	“S”
Brake type	GP-A-K
Max. speed at 90.0 t	100 km/h
Max. speed (unloaded)	120 km/h
Climate condition	T_{RIV}
R_{min} (single wagon)	75.0 m
Length over buffers	12,540 mm
Tare weight	~ 23.7 t
Payload	~ 66.3 t
Loading volume	77.0 m^3
Loading opening	11,702 x 1,868 mm
Unloading length	10,508 mm (total)
Unloading width	3,750 or 4,300 mm
Slope sheet angle	49°
Number of sections	2
Material of box	Carbon steel
Bogie type	BA 628.5 (K), BA 629.5 (K)
Doors operation	Hydraulic

The information provided herein is for general information purposes only.

Falns 85 m³ | 4-axle hopper wagon



Features

- This self discharging open hopper wagon is suitable for the transportation of weather resistant materials mainly coal, coke talc, limestone, gravel and sand.
- Side unloading is achieved by the pneumatically operated four doors at once or two and two opposite doors separately. Pressure air is supplied from separate 10 bar air pipeline with isolation possibility. There is a manual emergency system for unloading without pressure air.
- This wagon is designed according to TSI, EN, UIC for RIV and TEN RIV traffic operation.

Capabilities

- Two possibilities to unload and load. The transport of a whole load or in stages. The wagon has a short time resistance up to +80 ºC in heating ovens.
- The command of wagon discharging is possible from both sides of wagon. Air reservoirs enable minimum once open/close operations of doors for stand alone wagon.
- Tightness of doors for a grain >1 mm.

Falns 85 m³ | 4-axle hopper wagon



General parameters

Axle load	22.5 t / axle
Track gauge	1,435 mm
Loading gauge	G1-TSI
Brake regime	“S”
Brake type	GP-A-K
Max. speed at 90.0 t	100 km/h
Max. speed (unloaded)	120 km/h
Climate condition	T_{RIV}
R_{min} (single wagon)	75.0 m
Length over buffers	13,500 mm
Tare weight	~ 25.6 t
Payload	~ 64.4 t
Loading opening	12,660 x 1,950 mm
Unloading length	4 x 5,430 mm
Slope sheet angle	49°
Number of sections	2
Material of box	Carbon steel
Material of slope edges	Stainless
Bogie type	Y25Lsd1-K
Doors operation	Pneumatic
Air pressure	From 5 to 10 bar

The information provided herein is for general information purposes only.

Falns 181 86.6 m³ | 4-axle hopper wagon



Features

- This self discharging open hopper wagon is suitable for transportation of weather resistant materials, mainly brown or black coal and coke.
- Fast unloading is achieved by side unloading of the four doors. All four doors are operated hydraulically. Power is accumulated from a wheel set hydraulic pump. For emergency operation the wagon is equipped with a manually operated pump from the platform.
- The wagon design meets the requirements of TSI, EN, UIC standards and has TEN CE marking for traffic operation on the lines with G2 gauge (with bilateral agreements).

Capabilities

- One possible door width opening ~ 4,300 mm.
- The command of wagon discharging is possible from both sides of the wagon.
- The doors can be operated through three open or close operations using stored energy from a hydraulic storage pump.
- Tightness of doors for a grain >1 mm.

Falns 181 86.6 m³ | 4-axle hopper wagon

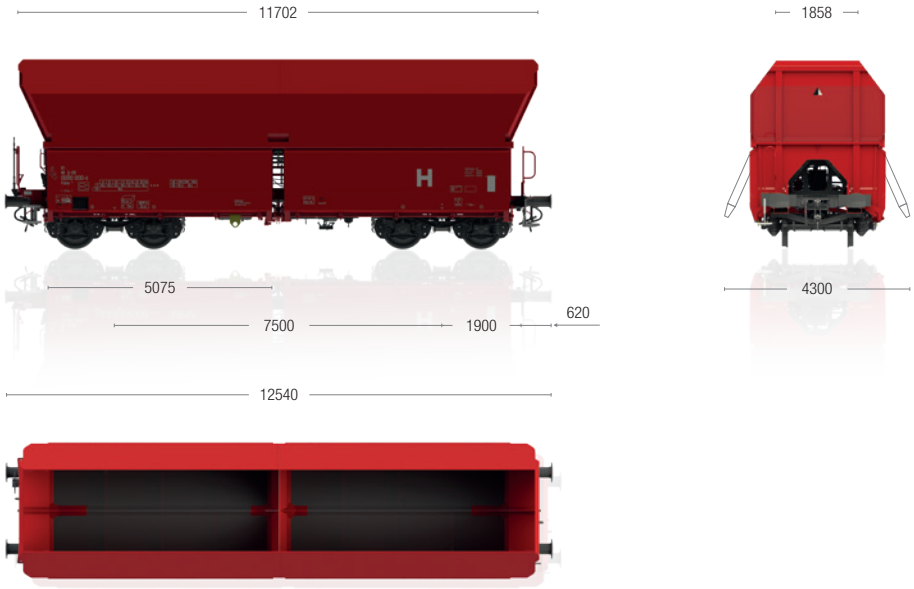

General parameters

Axle load	22.5 t / axle
Track gauge	1,435 mm
Loading gauge	G2-TSI
Brake regime	“S”
Brake type	GP-A (K)
Max. speed at 90.0 t	100 km/h
Max. speed (unloaded)	120 km/h
Climate condition	T1
R_{min} (single wagon)	75.0 m
Length over buffers	12,540 mm
Tare weight	~ 24.0 t
Payload	~ 66.0 t
Loading opening	11,702 x 1,868 mm
Unloading length	10,508 mm (total)
Unloading width	4,300 mm
Slope sheet angle	49°
Number of sections	2
Material of box	Stainless
Bogie type	Y25Lsd1-K (one with hydraulic pump)
Doors operation	Hydraulic

The descriptions provided herein are for general information purposes only.

Falns 87 m³ | 4-axle hopper wagon



Features

- This self-discharging open hopper wagon is suitable for the transportation of weather resistant materials mainly coal, coke, limestone, gravel and sand. The transported product is discharged by gravitation, to both sides of wagon into the depth reservoir.
- Side unloading is achieved by the pneumatically operated four flaps at once (1 x 4) or two and two opposite flaps (2 x 2) separately. Pressure air is supplied from feeding 10 bar air pipeline with isolation possibility. There is a pneumatic emergency system for unloading of wagon when malfunction on the pneumatic control system.
- The wagon design meets the requirements of TSI, EN, UIC standards and has TEN GE marking for traffic operation.

Capabilities

- Two possibilities to unload – 1 x 4 and 2 x 2
- Operating temperature -25 ºC / +40 ºC (short time resistance up to +70 ºC during heating in heating ovens).
- The command of wagon discharging is possible from both sides of wagon.
- The quick release coupling is fitted in the pneumatic box of emergency system for an external air supply.
- Air reservoirs enable minimum twice open/close operations of flaps from pressure 10 bars for stand-alone wagon.
- Tightness of flaps for a grain >1 mm.

Falns 87 m³ | 4-axle hopper wagon



General parameters

Axle load	22.5 t / axle
Track gauge	1,435 mm
Loading gauge	G1-TSI
Brake regime	“S”
Brake type	KE-GP-A (K)
Max. speed at 90.0 t	100 km/h
Max. speed (unloaded)	120 km/h
Climate condition	T1
R_{min} (single wagon)	75.0 m
Length over buffers	13,500 mm
Tare weight	~ 24.9 t
Payload	~ 65.1 t
Loading volume	87.0 m^3
Loading opening	12,660 x 1,500 mm
Unloading length	4 x 5,430 mm
Slope sheet angle	49°
Number of sections	2
Material of slope edges	Stainless steel
Bogie type	Y25Ls1-K
Flaps standard operation / Emergency operation	Pneumatic / pneumatic
Air pressure for operation with flaps	From 5 to 10 bar

The descriptions provided herein are for general information purposes only.

Tanpps 55 m³-T05A | 4-axle sand hopper wagon



Features

- This four-axle box wagon is suitable for transportation of sand and aggregate.
- The wagon is designed to use on the UK market and meets the requirements of TSI.
- Unloading direction – between the rails only.

Capabilities

- Wagon is equipped with pneumatically operated top and bottom doors.
- The bottom doors are individually operated, independent of each other.
- The bottom doors are equipped with flow control system.
- Wagon is equipped with one weighing valve.

Tanpps 55 m³-T05A | 4-axle sand hopper wagon

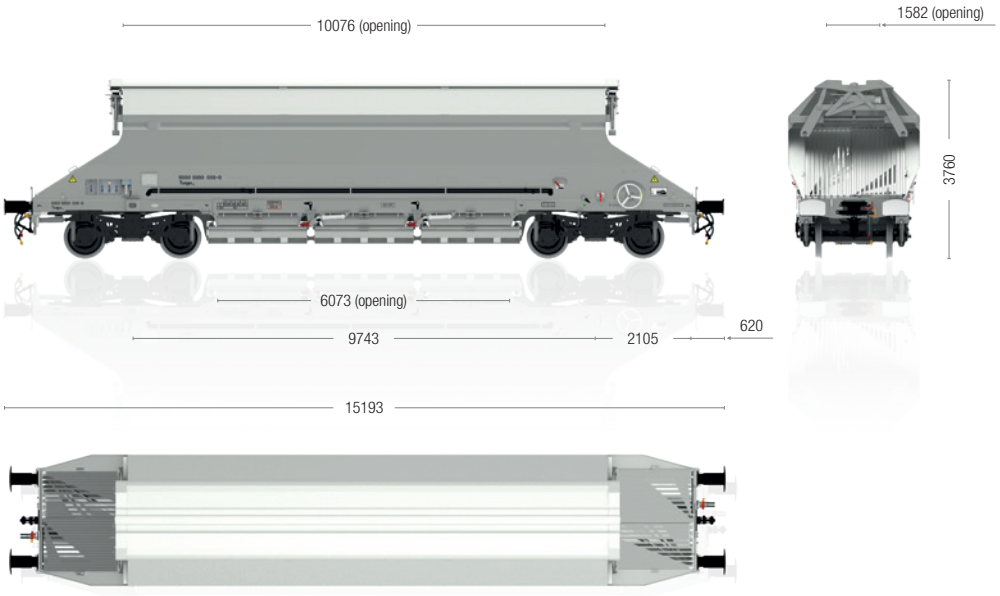

General parameters

Axle load	25.4 t / axle
Track gauge	1,435 mm
Loading gauge	W6a
Brake regime	“S”
Brake shoe	TMD804
Max. speed at 101.6 t	100 km/h / 60 mph
Max. speed at 25 t (unloaded)	120 km/h / 75 mph
Climate condition	T1
R_{min} (single wagon)	75.0 m
Tare weight	24.9 t
Payload	76.7 t
Capacity	55.0 m³
Body plates	4 mm top, 5 mm bottom – S355J2W
Bogie type	LN25

The descriptions provided herein are for general information purposes only.

Tanoos 78 m³-T03A | 4-axle hopper wagon



Features

- This four-axle box wagon is suitable for transportation of sand and fertilizers.
- The wagon design meets the requirements of TSI, EN, UIC standards and has TEN GE marking for traffic operation .
- Unloading direction – between the rails only.

Capabilities

- Wagon is equipped with mechanically operated top and bottom gates.
- Each driving wheel opens two gates simultaneously.
- Bottom part of the body is made of stainless steel.
- Wagon is equipped with one weighing valve.
- Bottom gates have spring steel sealing profiles that ensure tightness for a very fine product, such as silica sand.
- Maintenance-free plastic bearings for the top/bottom gate mechanism.

Tanoos 78 m³-T03A | 4-axle hopper wagon

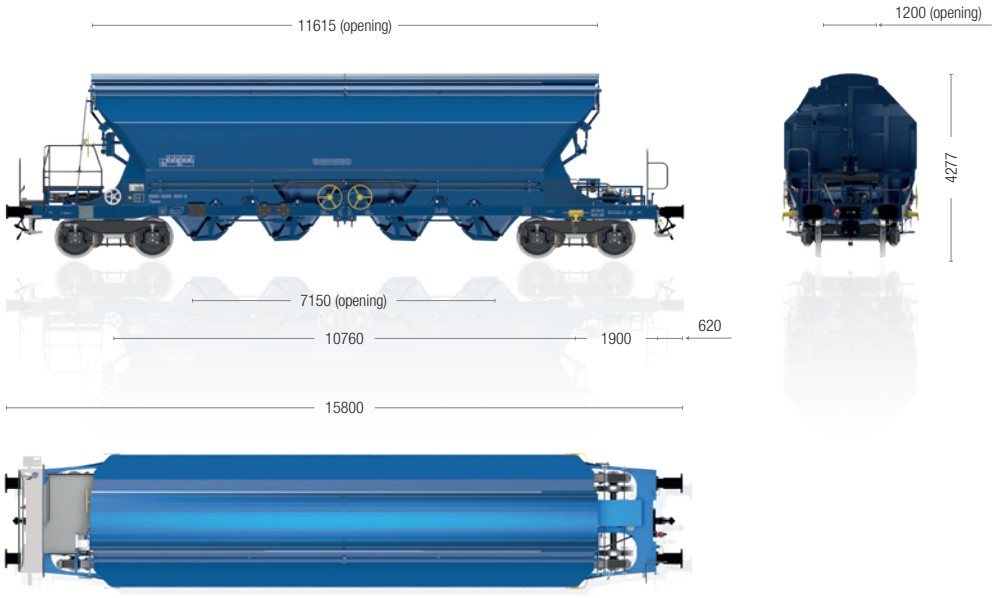

General parameters

Axle load	22.5 t / axle
Track gauge	1,435 mm
Loading gauge	G1-TSI
Brake regime	“S”
Brake shoe	C810
Max. speed at 90.0 t	100 km/h
Max. speed at (unloaded)	120 km/h
Climate condition	T1
R_{min} (single wagon)	75.0 m
Tare weight	23.0 t
Payload	67.0 t
Bottom aperture	850 x 1,200 (each hopper)
Capacity	78.0 m^3
Bogie type	Y25Lsd-K/-K-V or Y25Lsd-KP1

The descriptions provided herein are for general information purposes only.

Tadns 82 m³ | 4-axle hopper wagon



Features

- This high bilateral controlled gravity discharging wagon with opening roof is designed for transportation of limestone and other bulk stuffs, which require protection from weather conditions.
- Loading of the wagon is carried out by gravity, through the opening at the top of the body, and controlled unloading is performed manually, individually operating 8 rotating cylindrical gates, operated from end platforms.
- The wagon design meets the requirements of TSI, EN, UIC standards and has TEN GE marking for traffic operation.
- Underframe complies with EN 12663-2 and UIC 530-1 provisions for mounting of the Automatic Coupler.

Capabilities

- Completely emptying wagon by opening the apertures on one side only.
- Controlled discharging on conveyor or into underground bunker.
- Tightness of unloading openings is ~2 mm.

Alternative options:

- Width of folding chutes 600 or 820 mm
- Width of fix chutes 500 or 540 mm
- The ventilation in the roof
- Hammer plates on the hoppers
- The inner coat for aggressive material

Tadns 82 m³ | 4-axle hopper wagon

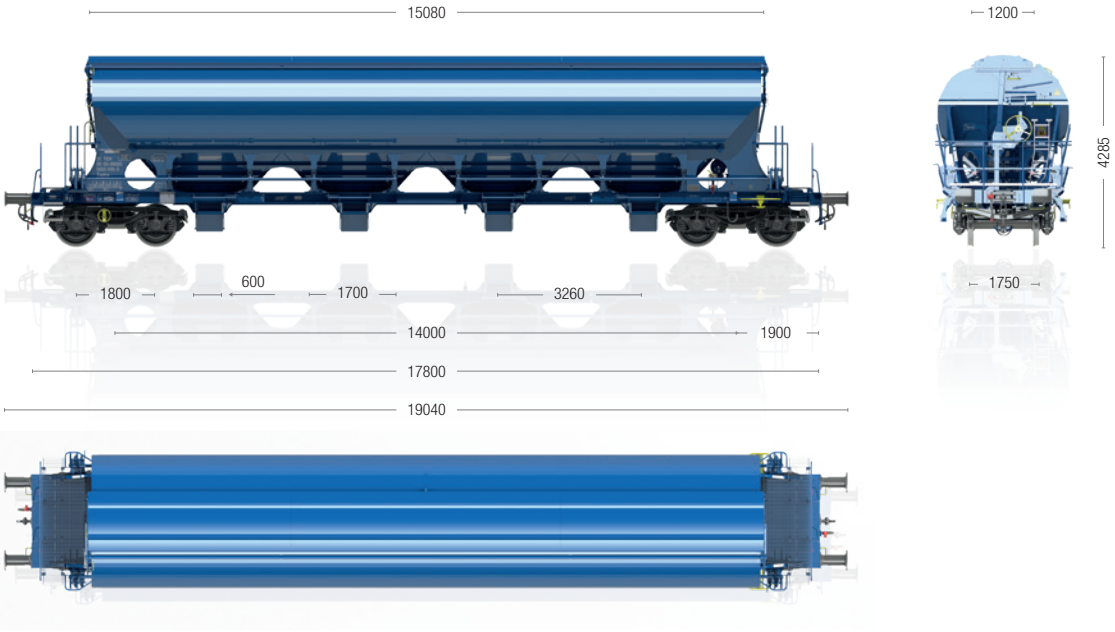

General parameters

Axle load	22.5 t / axle
Track gauge	1,435 mm
Loading gauge	G1-TSI
Wagon running mode	“S”
Automatic brake type	KE-GP-A (K)
Wagon running speed (loaded)	100 km/h
Running speed of unloaded and loaded to a total weight of 58.0 t	120 km/h
Climate condition	T1
R_{min} (single wagon)	75.0 m
Length over buffers	19,040 mm
Box volume	~ 82.5 m³
Tare weight	~ 24.1 ± 2 % t
Payload	~ 65.9 t
Loading opening	15,080 x 1,200 mm
Side wall angle	43°
Height of bottom opening above rail	700 mm
Bogie type	Y25Lsd-KP1

The descriptions provided herein are for general information purposes only.

Tagnoos 898 90 m³ | 4-axle hopper wagon



Features

- This self discharging covered hopper wagon is suitable for transport of bulk loads – grain, corn, soya etc., which need to be protected against weather conditions.
- The body of the wagon is made from stainless steel material. Inside body surface is not painted. Loading opening is covered with movable roof. Four bottom unloading doors.
- This wagon is designed according to TSI, EN, UIC for RIV and TEN RIV traffic operation.

Capabilities

- The wagon is loaded from the top after the roof is opened. Roof is manually operated from wagon end platform.
- The wagon is unloaded from the bottom through four unloading openings. Flaps are manually operated from both wagon sides – each pair of flaps separately. Transported material is unloaded between the rails.
- Tightness of unloading openings is ≤ 1 mm.

Tagnoos 898 90 m³ | 4-axle hopper wagon

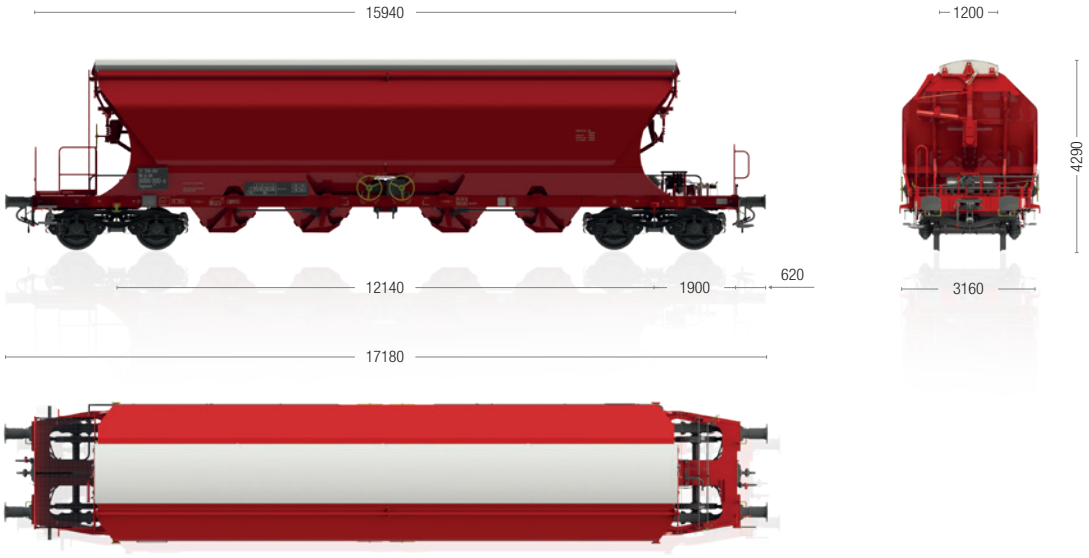

General parameters

Axle load	22.5 t / axle
Track gauge	1,435 mm
Loading gauge	G1-TSI
Brake regime	“S”
Brake type	KE-GP-A (K)
Max. speed at 90.0 t	100 km/h
Max. speed (unloaded)	120 km/h
Climate condition	T1
R_{min} (single wagon)	75.0 m
Length over buffers	17,180 mm
Tare weight	24.0 t
Payload	66.0 t
Loading opening	12,934 x 1,200 mm
Unloading opening	4 x 915 x 1,160 ÷ 1,390 mm
Material of box	Stainless
Bogie type	Y25Lsi(f)-K
Operations	Manually

The descriptions provided herein are for general information purposes only.

Tagnpps 95 m³ | 4-axle grain hopper



Features

- The 4-axle Grain Hopper wagon is designed for cereal transportation. The filling degree is ca. 95 - 97%, function of the density of the product and specific slope angle.
- The wagon is design and built in accordance with TSI regulations and corresponding EN / UIC standards.
- Wagon tare weight is 19.7 t ± 2% t (equipped with BA004 wheelset); working temperature T1, between -25 °C and +40 °C.
- The wagon has TEN marking for traffic operation.

Capabilities

- The wagon is loaded through loading opening on upper part of box, allover length of box. The opening is cover by a lightweight roof. The roof is operated from sides, from the ground level, on one wagon end, on both wagon sides, by operating a hand wheel. The mechanism can be blocked in closed positions.
- Unloading between tracks shall be completed by means of two cylinder doors on each hopper operated from the ground, from both sides, individually for each hopper. Doors can be blocked in intermediary positions.
- Box has, at request of client, devices for checking samples one of each side.

Tagnpps 95 m³ | 4-axle grain hopper



Advantages

- Reduced tare weight.
- Reduced wagon length.
- Capacity of the box optimal for common cereals.

General parameters

Axle load	22.5 t / axle
Track gauge	1,435 mm
Loading gauge	G1-TSI
Brake regime	“S”
Brake type	KE-GP-A (K)
Max. speed at 90.0 t	100 km/h
Max. speed (unloaded)	120 km/h
Climate condition	T1
R_{min} (single wagon)	75.0 m
Length over buffers	14,800 mm
Tare weight	20.0 t ± 2 % t
Box volume	95.0 m^3 ± 1%
Loading opening	12,400 x 800 mm
Unloading opening	3 x 2 x 300 x 1,350 mm
Material of box	Carbon steel
Bogie type	Y25Lsd-KC1 (with CFCB brake) – TSI certificate – standard ARI.
Operations	Manually
Walls slope	34°
Discharging openings slope	40°

The descriptions provided herein are for general information purposes only.

Tagnpps 96 m³ | 4-axle grain hopper



Features

- This self-discharging covered hopper wagon is suitable for transport of bulk loads – grain, corn, soya etc., which need to be protected against weather conditions.
- Loading opening is covered with movable roof. Six bottom unloading openings are covered with sliding doors.
- This wagon is designed according to TSI, EN, UIC for TEN RIV traffic operation.

Capabilities

- The wagon is loaded from the top after the roof is opened. Roof is manually operated from ground level from both sides of wagon end platform.
  - The wagon is unloaded from the bottom through four unloading openings. Sliding valves are manually operated from both wagon sides – each valve separately. Transported material is unloaded between the rails.
  - Tightness of unloading openings is ≤ 1 mm.

Tagnpps 96 m³ | 4-axle grain hopper

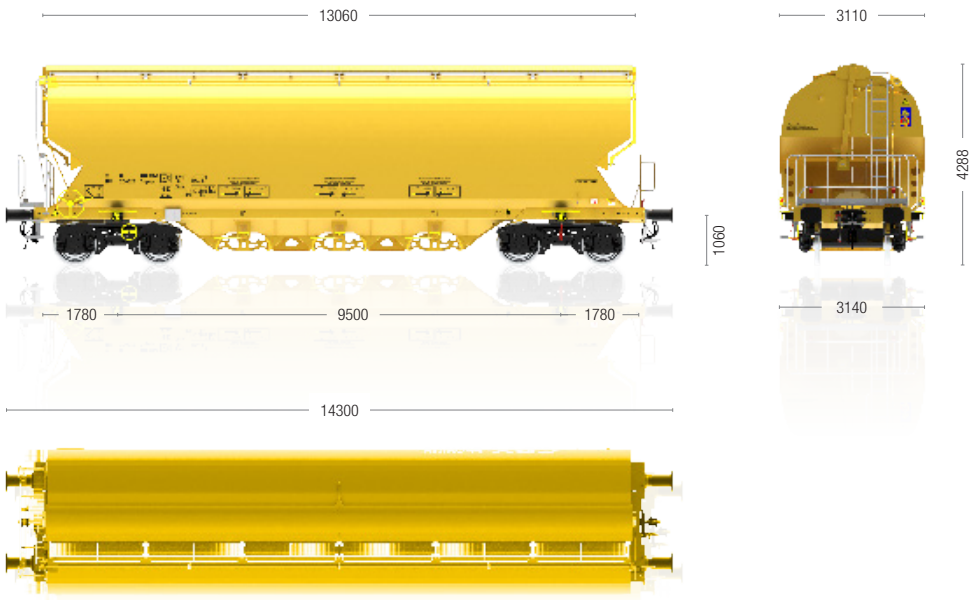

General parameters

Axle load	22.5 t / axle
Track gauge	1,435 mm
Loading gauge	G1-TSI
Brake regim	“S”
Brake type	KE-GP-A (K)
Max. speed at 90.0 t	100 km/h
Max. speed (unloaded)	120 km/h
Climate condition	T3
R_{min} (single wagon)	75.0 m
Length over buffers	14,300 mm
Tare weight	19.6 t ± 2 % t
Box volume	96.0 m^3 ± 1%
Loading opening	12,460 x 600 mm
Unloading opening	3 x 2 x 260 x 1,350 mm
Material of box	Carbon steel
Bogie type	Y25Lsdi(f)-KC1 (with CFCB brake) –TSI certificate – standard ARI.
Operations	Manually
Walls slope	33.5°
Discharging openings slope	40°

The descriptions provided herein are for general information purposes only.

Tagnpps 102 m³ | 4-axle grain hopper wagon



Features

- This self discharging covered hopper is suitable for transport of bulk loads-grain, corn, soya, etc., which need to be protected against weather condition.
- Loading opening is covered with movable roof.
- Three hoppers, each with a pair of cylindrical doors.
- The wagon is designed according to TSI, EN, UIC for GE operations.

Capabilities

- The wagon is loaded from the top after the roof is opened. Roof is manualy operated from ground, from each side of wagon.
- The wagon is unloaded from the bottom through three pairs of doors, manually operated from both wagon sides – each pair separately. Transported material is unloaded between the rails.
- Tigtheness of unloading openings is max. 1 mm.

Tagnpps 102 m³ | 4-axle grain hopper wagon

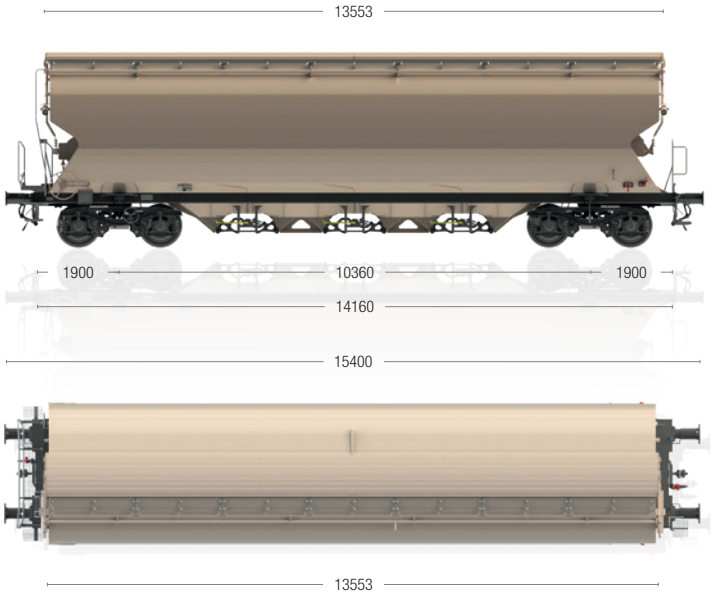

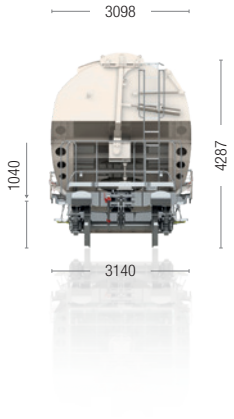

General parameters

Axle load	22.5 t / axle
Track gauge	1,435 mm
Loading gauge	G1-TSI
Brake regime	“S”
Brake type	KE-GP-A (K)
Max. speed at 90.0 t	100 km/h
Max. speed (unloaded)	120 km/h
Climate condition	T1
R_{min} (single wagon)	75.0 m
Length over buffers	15,400 mm
Tare weight	~ 20.8 t
Payload	~ 69.8 t
Loading opening	13,400 x 800 mm
Unloading opening	3 x 2 x 300 x 1,350 mm
Material of box	Carbon steel
Bogie type	Y25Lsi(f)-KCI (CFCB brake)
Operations	Manually

The descriptions provided herein are for general information purposes only.

Tagnpps 130 m³ | 4-axle grain hopper wagon



Features

- This self discharging covered hopper is suitable for transport of bulk loads-grain, with low density, which need to be protected against weather condition.
- Loading opening is covered with movable roof.
- Three hoppers, each with a pair of cylindrical doors.
- The wagon is designed according to TSI, EN, UIC for GE operartions.

Capabilities

- The wagon is loaded from the top after the roof is opened. Roof is manualy operated from end platform.
- The wagon is unloaded from the bottom through three pairs of doors, manually operated from both wagon sides – each pair separately. Transported material is unloaded between the rails.
- Tigtheness of unloading openings is max. 1 mm.

Tagnpps 130 m³ | 4-axle grain hopper wagon

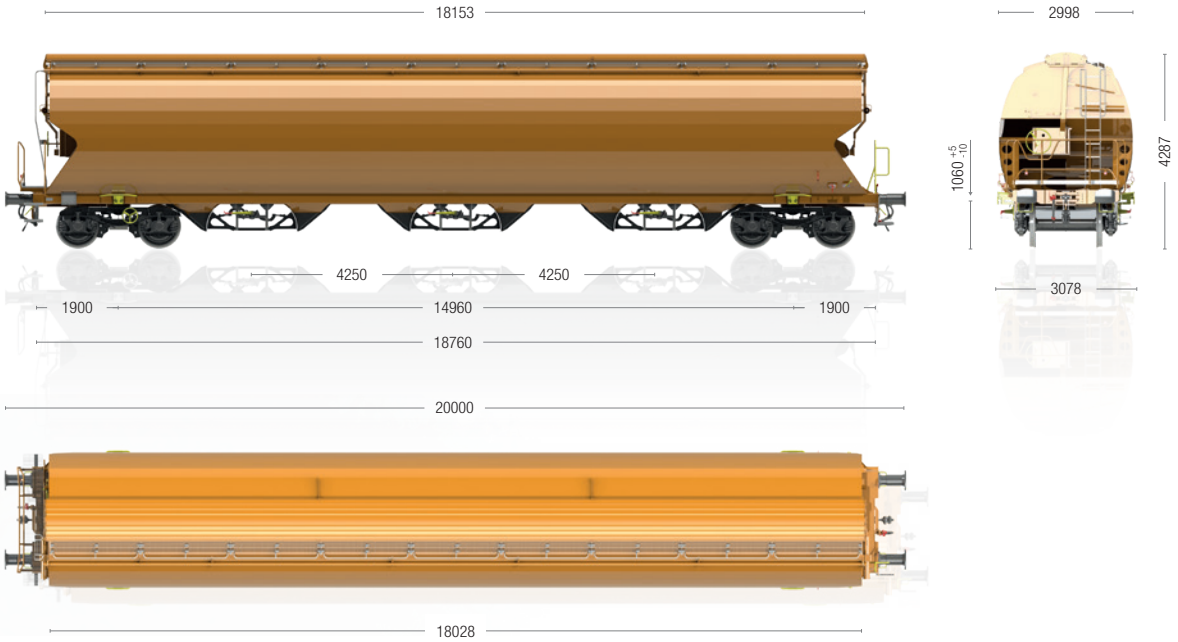

General parameters

Axle load	22.5 t / axle
Track gauge	1,435 mm
Loading gauge	G1-TSI
Brake regime	“S”
Brake type	KE-GP-A (K)
Max. speed tare wagon and loaded up to 14.5 t / axle	120 km/h
Max. speed– loaded from 14.5 t / axle up to 22.5 t / axle	100 km/h
Climate condition	T1
R_{min} (single wagon)	75.0 m
Length over buffers	20,000 mm
Tare weight	~ 22.0 t
Payload	~ 68.0 t
Loading opening	18,000 x 800 mm
Unloading opening	3 x 2 x 450 x 1,400 mm
Bogie type	Y25 Lsdi(f)-KC1 (CFCB brake)
Operations	Manually

The descriptions provided herein are for general information purposes only.

Faccns (Xans) | 4-axle special hopper wagon



Features

- This self discharging wagon is suitable for transportation and discharging aggregate used for track line maintenance.
- Discharging is done by electrically driven vibrating gutters and conveyor.
- Discharging needs external power supply – from power wagon or from electrical power network.
- The wagon design meets the requirements of TSI, EN, UIC.

Capabilities

- Possibility to discharge from both sides of the wagon.
- The discharging area is 1.3 - 4.5 m from wagon axis – or between rails.

Faccns (Xans) | 4-axle special hopper wagon

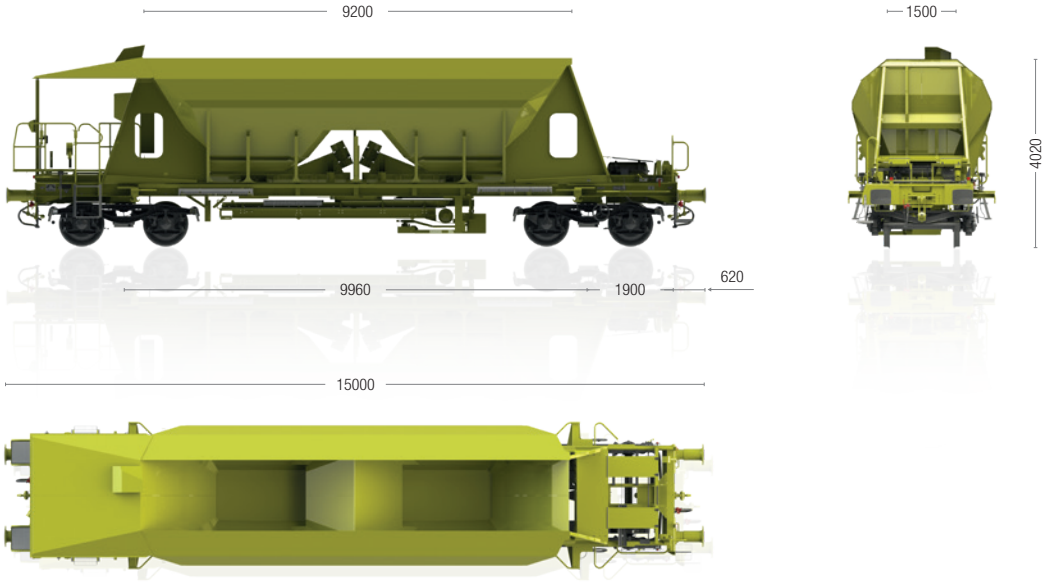

General parameters

Axle load	22.5 t / axle
Track gauge	1,435 mm
Loading gauge	G1-TSI
Brake regime	“S”
Brake type	GP-A
Max. speed at 90.0 t	100 km/h
Max. speed (unloaded)	120 km/h
Climate condition	T1
R_{min} (single wagon)	35.0 m
Length over buffers	15,000 mm
Tare weight	~ 26.2 t
Payload	~ 63.8 t
Loading volume	40.0 m^3
Loading opening	9,200 x 1,500 mm
Unloading opening	2 x 1,900 x 1,000 mm
Number of selections	2
Discharging time	~ 8 min.
Material of box	Carbon steel
Bogie type	Y25Lsdi(f)
Power supply	3 x 400 V / 16 kVA

The descriptions provided herein are for general information purposes only.

Faeeprrs (SSDT) | Super self discharging train



Features

- Known as the Super Self Discharging Train, the train which is 600 meters in length, consists of permanently coupled rakes, each rake has 6 or 4 wagons, with an incorporated conveyor discharging system. The train is suitable for effective transport of gravel, ballast, sand and mixed minerals.
- Each rake consists of a power unit fitted with a diesel engine which powers the hydraulic, electric and pneumatic systems. These systems assure the movement of the discharging system. The other wagons are end units or intermediary units. Via the conveyor, the product is transferred into outside bunkers or directly to other vehicles (road vehicles or rail vehicles) using a special equipped transfer wagon, which operates at the end of the train through a rotating arm.
- The wagon design meets the requirements of TSI, EN, UIC standards.

Capabilities

- Transported load of the whole train is discharged by the trains continuous conveyor line.
- Load is bulked on a pile by the transfer wagon operating conveyor at the side of the track, or directly into other vehicles (road or rail).
- Transfer wagon conveyor turn of max. 270°, with maximum inclination of 24°, with a discharging distance of 14.5 meters maximum from axis of the rail.
- Discharging can be done by the remote control.
- The dust from moved load is reduced by the water spray system.
- Possibility is to connect more wagons to one longer train.

Faeeprrs (SSDT) | Super self discharging train

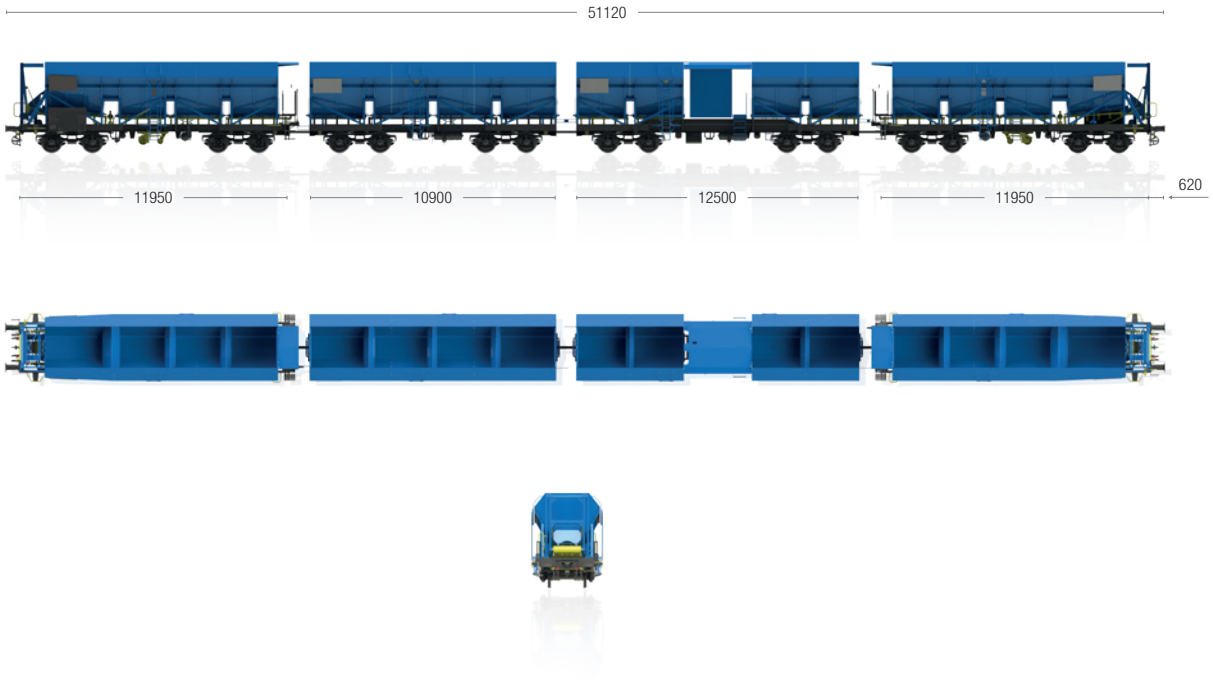

General parameters

Axle load	22.5 t / axle
Track gauge	1,435 mm
Loading gauge	G1-TSI
Brake regime	“S”
Brake type	GP (K)
Max. speed (loaded)	100 km/h
Max. speed (unloaded)	100 km/h
Climate condition	T1
R_{min} (single wagon)	75.0 m
Length over buffers	6U - 74,640 mm, 4U - 51,120 mm
Length over buffers with transfer wagon	6U - 94,280 mm, 4U - 70,760 mm
Tare weight	6U - ~ 167.7 t, 4U - ~ 116.5 t
Payload	6U - ~ 372.3 t, 4U - ~ 243.5 t
Loading volume	6U - 298.7 m^3, 4U - 193.5 m^3
Discharge rate	~ 1,000 t / hour
Material of box	Carbon steel
Bogie type	Y25Ls1-K

The descriptions provided herein are for general information purposes only.

SSDCT | Super self discharging and charging train



Features

- The on-track machine, known as Super Self Discharging and Charging Train, consists of 5-unit permanently coupled rakes. Rakes are equipped by the conveyor loading system (upper conveyors) and conveyor discharging system (lower conveyors). Conveyors are working simultaneously – dual flow principle.
- The SSDCT is a technological part of specialized track renewal train. The rake consists of 1 outer unit (unit B), 3 inner units (units A) and one outer power unit (unit C).
- SSDCT is certified under the following standards:
  - IN 1418 for running on the French network,
  - NFF 58002 for working on the French network.
  - Directive 2006/42 EC.

Capabilities

- The SSDCT lower and upper conveyors are able to transport:
  - the new ballast, well calibrated, coming directly from the stone pit (31.5 - 50 mm granularity in general). The calculated material density is 1.7 t/m^3.
  - the old ballast coming from the track bed through the excavating machine. This ballast may be sticky, muddy and melt with old steel components coming from the track.
- The on-track machine is equipped by variety of sensors, inside cameras, outside illumination, it is controlled by the PLC and it communicates with the other machines of the track renewal train.
- The machine is equipped with 10 bar air piping and couplings for cleaning works as well as with water spray dust suppression system.

SSDCT | Super self discharging and charging train

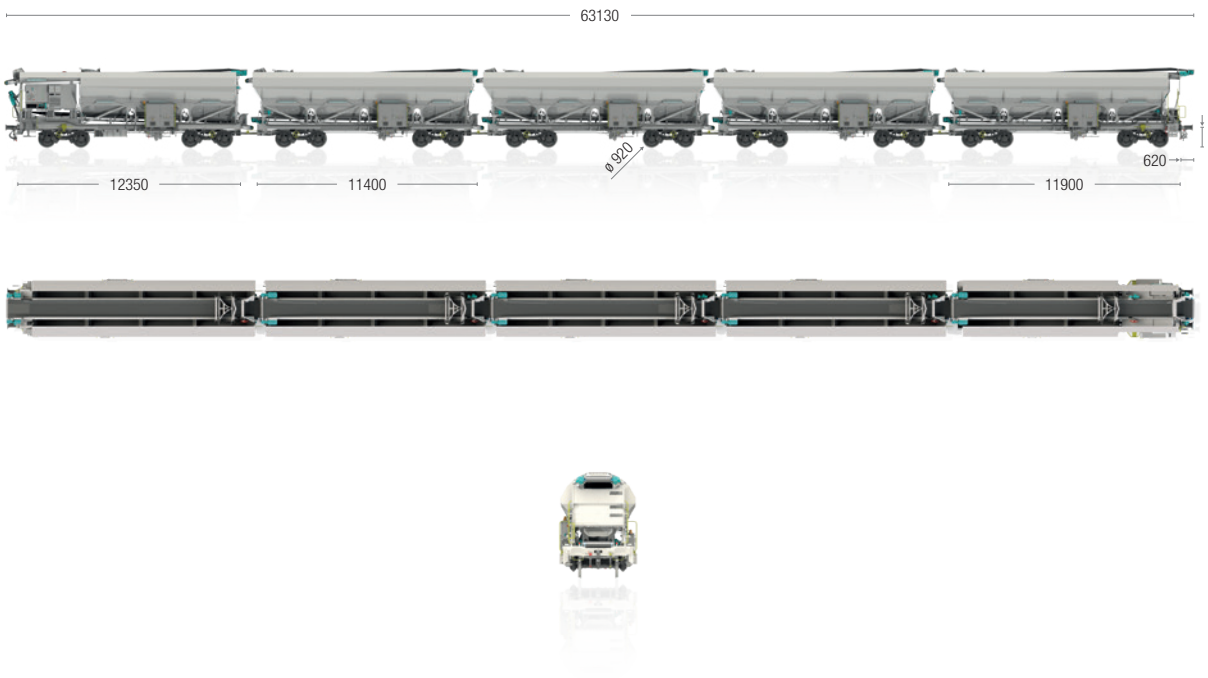

General parameters

Axle load	22.5 t
Track gauge	1,435 mm
Running gauge	G1-TSI
Max. speed – running mode	100 km/h
Max. speed – working mode	700 m/h
Climate conditions	T1-TSI
R_{min} – running mode (single 5-unit rake)	125.0 m
R_{min} – working mode	350.0 m
Maximum track cant	180.0 mm
Length over buffers	63,130 mm
Tare weight of units	
Inner unit A	29.2 t
Outer unit B	30.9 t
Outer power unit C	35.2 t
Material of box	Carbon steel
Bogie Type	Y25Lsdi(f)-KC1 (with CFCB brake unit and hand brake, modified for on-track machine)

The descriptions provided herein are for general information purposes only.

Sleeper carrier | Railway sleepers transport wagon



Features

- The on-track machine, known as Sleeper carrier, brings and transport old and new railway sleepers, which will be stored in pallets.
- The gantry transportation crane runs on two lateral rails at 20 km/h to bring pallets from the store (wagons) to the track renewal train.
- Lateral and frontal protection walls prevent the falling of sleepers.
- Sleeper carrier is certified under the following standards:
  - IN 1418 for running on the French network,
  - NFF 58002 for working on the French network.
  - Directive 2006/42 EC.

Capabilities

- The on-track machine is able to carry four pallets all charged with forty sleepers (5 layers of 8 sleepers spaced with wooden batten).
- The machine is equipped by outside illumination and electrical wiring 230 V AC.
- R_{min} at running mode when the bridges connect the wagons is 150 m.

Sleeper carrier | Railway sleepers transport wagon

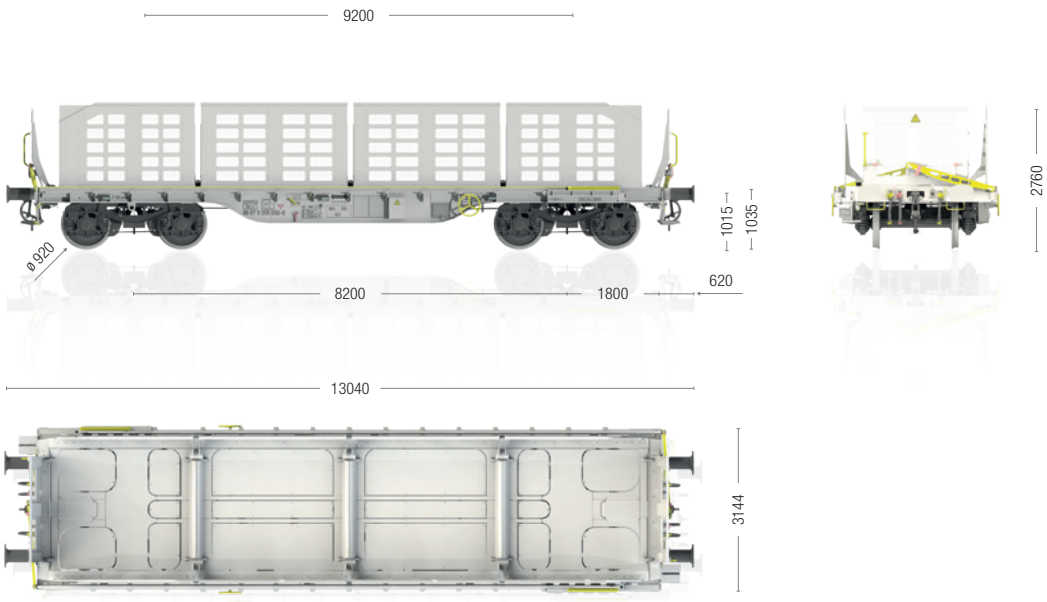

General parameters

Track gauge	1,435 mm
Running gauge	G1-TSI
Max. speed – running mode	100 km/h
Max. speed – working mode	70 km/h
Climate conditions	T1-TSI
R_{min} – running mode	80.0 m
R_{min} – working mode	350.0 m
Maximum track cant	180.0 mm
Length over buffers	13,040 mm
Tare weight	19.8 t
Max. weight in running mode	70.6 t
Max. weight in working mode	97.0 t
Bogie Type	Y25Lsd-KP1 (modified for on-track machine)

The descriptions provided herein are for general information purposes only.

MRA UK | 5-unit special side tipping wagon



Features

- This self discharging open hopper wagon is suitable for transportation of ballast – product density 1,450 kg/m^3.
- The wagon includes hydraulic capacity to facilitate the dump action of the box, the locking mechanism and control of the discharge chute. A 415 V 3-phase generator supplies electric power for the hydraulic pumps. Between units connections are made by drawbars.
- This wagon is designed according to EN, Group Standards for UK traffic operation.

Capabilities

- Each unit has two tipping boxes designed to tip to either side of the vehicle.
- Remote control of discharging
- Electrical interlocks are fitted to ensure the correct operation of the system in service.
- Design of doors prevents loss of transported material.

MRA UK | 5-unit special side tipping wagon

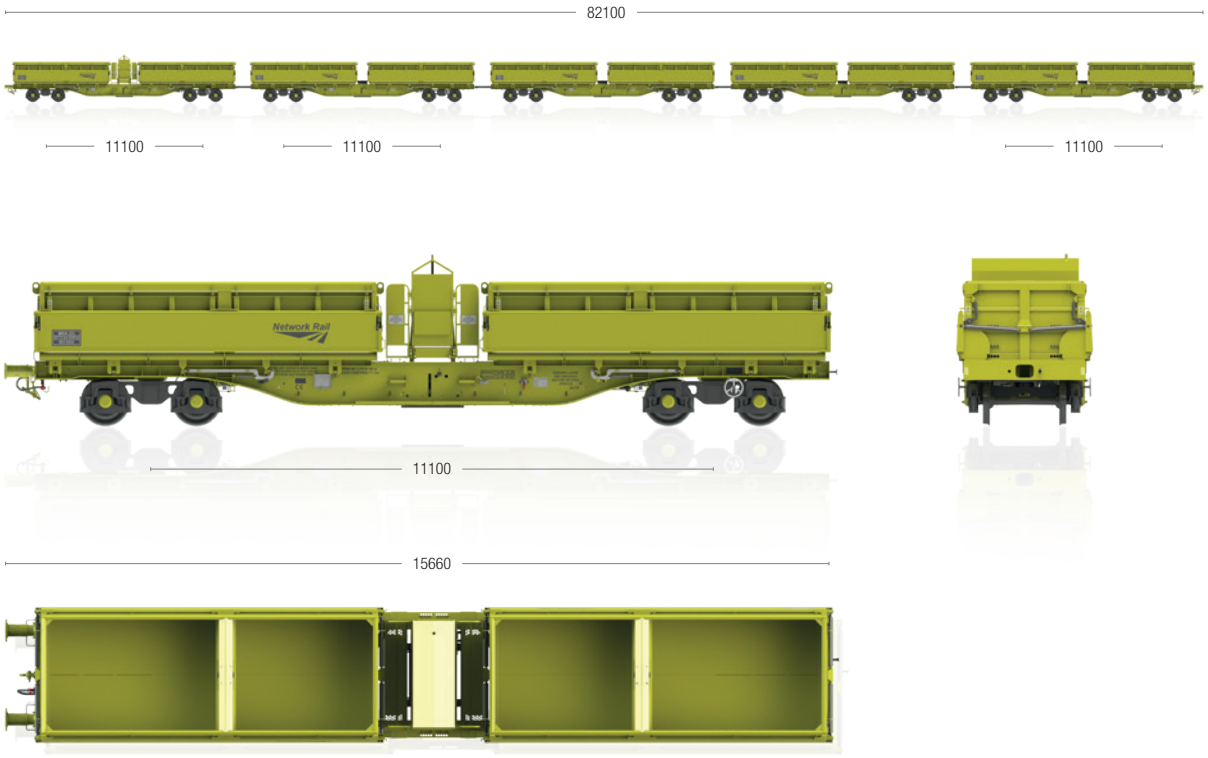

General parameters

Axle load	22.5 t / axle
Track gauge	1,435 mm
Loading gauge	W6a
Brake regime	UK
Brake type	GP-A (K)
Max. speed at 90.0 t	100 km/h (60 mph)
Max. speed (unloaded)	120 km/h (75 mph)
Climate condition	T1
R_{min} (single wagon)	60.0 m
Length over buffers	82,100 mm
Tare weight	~ 167.5 t
Payload	~ 282.5 t
Volume	204.0 m^3
Load width	2,190 mm
Load length	7,084 mm*
Material of box	Carbon steel
Bogie type	AM III
Wheel diameter	920 mm
Wheel base	1,800 mm
Doors operation	Hydraulic

The descriptions provided herein are for general information purposes only.
* Drive unit length - 6,440 mm.

GB25RS | Bogies family 25.0 t / axle – with standard brake levers

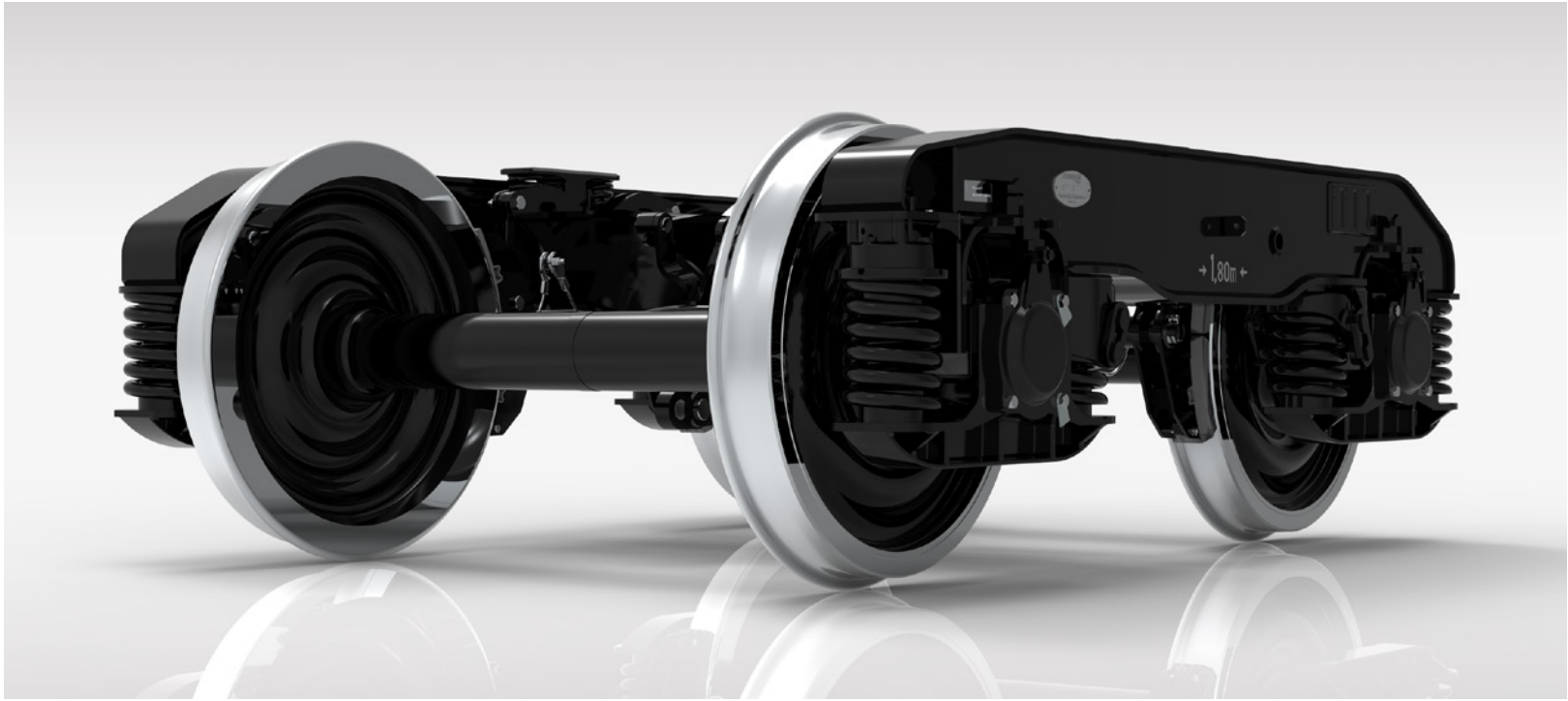

Features

- Radial steering of wheelsets (lower wheel wear).
- Lightweight frame designed for loads of 25t/axle.
- Standard brake.
- The bogie is designed and approved as interoperability constituents in accordance with TSI.

Capabilities

- The bogie could be equipped with weighing valve or not.
- It can be equipped with different equipment according to customer requirements.

GB25RS | Bogies family 25.0 t / axle – with standard brake levers



General parameters

Axle load	25.0 t / axle
Track gauge	1,435 mm
Loading gauge	G1-TSI
Brake regime	“S” for standard brake system “SS“
Brake type	K
Brake shoe	1xBgu
Max. speed at 22.5 t / axle	100 km/h
Climate condition	T1 from -25 °C to +40 °C
Tare weight	3,950 kg to 4,220 kg ± 2 % for standard brake

The descriptions provided herein are for general information purposes only.

GB25RS | Bogies family 25.0 t / axle – with compact brake

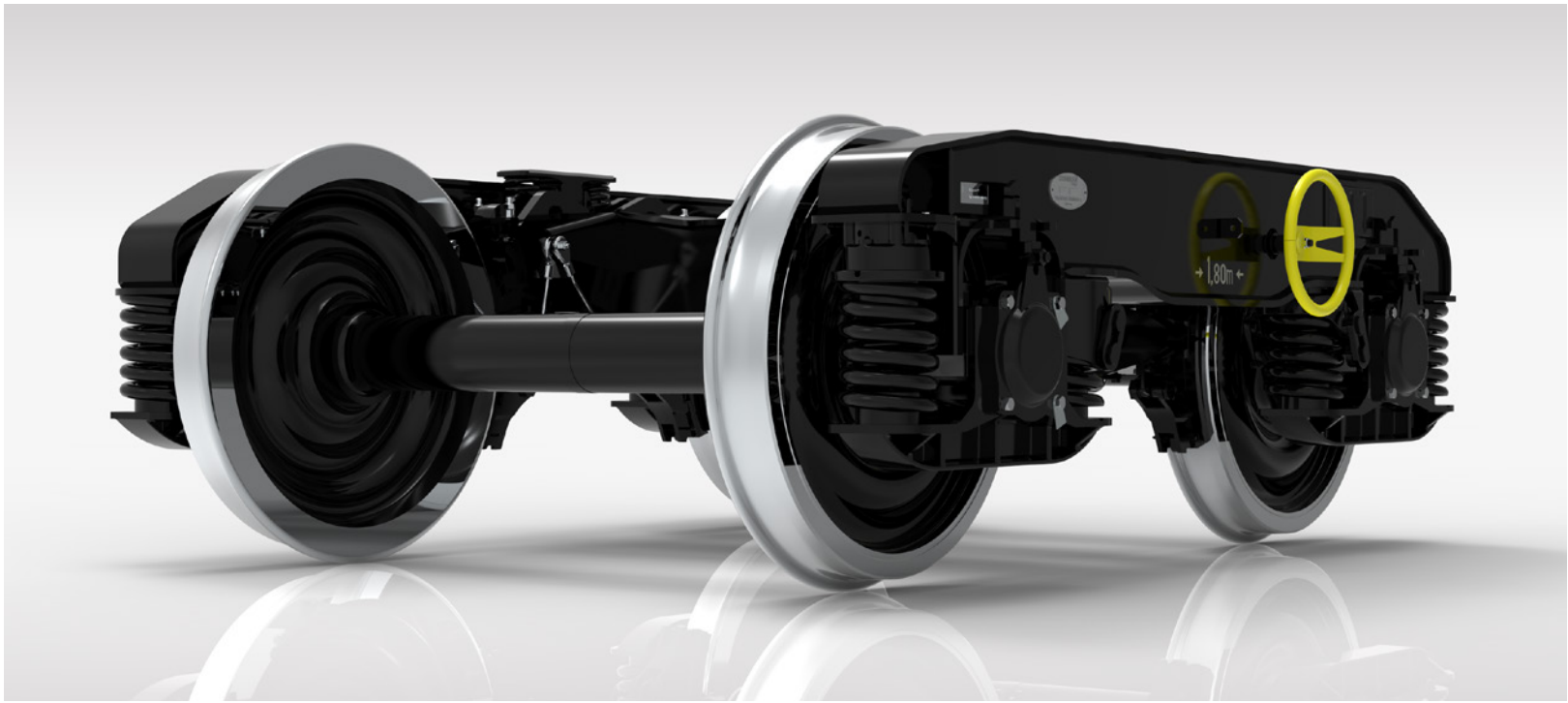

Features

- Radial steering of wheelsets (lower wheel wear).
- Lightweight frame designed for loads of 25t/axle.
- Compact brake different manufacturers (Knorr, Wabtec).
- The bogie is designed and approved as interoperability constituents in accordance with TSI.

Capabilities

- The bogie could be equipped with weighing valve or not, with handbrake or not.
- It can be equipped with different equipment according to customer requirements.

GB25RS | Bogies family 25.0 t / axle – with compact brake

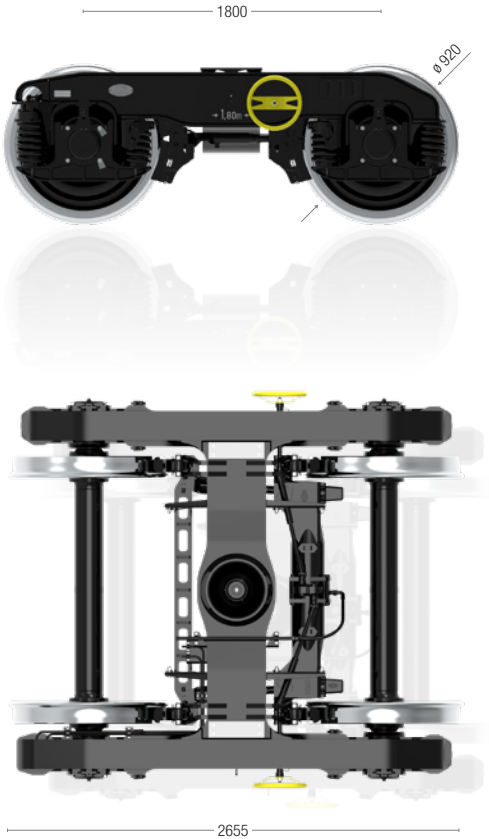

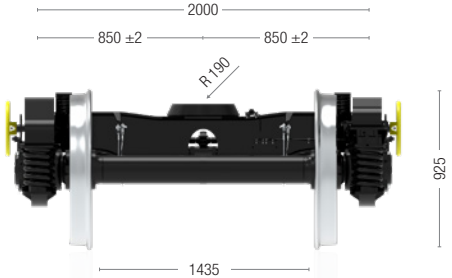

General parameters

Axle load	22.5 t / axle
Track gauge	1,435 mm
Loading gauge	G1-TSI
Brake regime	“S”
Brake type	K
Brake shoe	1xBgu
Max. speed at 22.5 t / axle	100 km/h
Climate condition	T1 from -25 °C to +40 °C
Tare weight	3,900 kg to 4,300 kg ± 2 % for compact brake

The descriptions provided herein are for general information purposes only.

GB25RS | Bogies family 25.0 t / axle – with disc brake

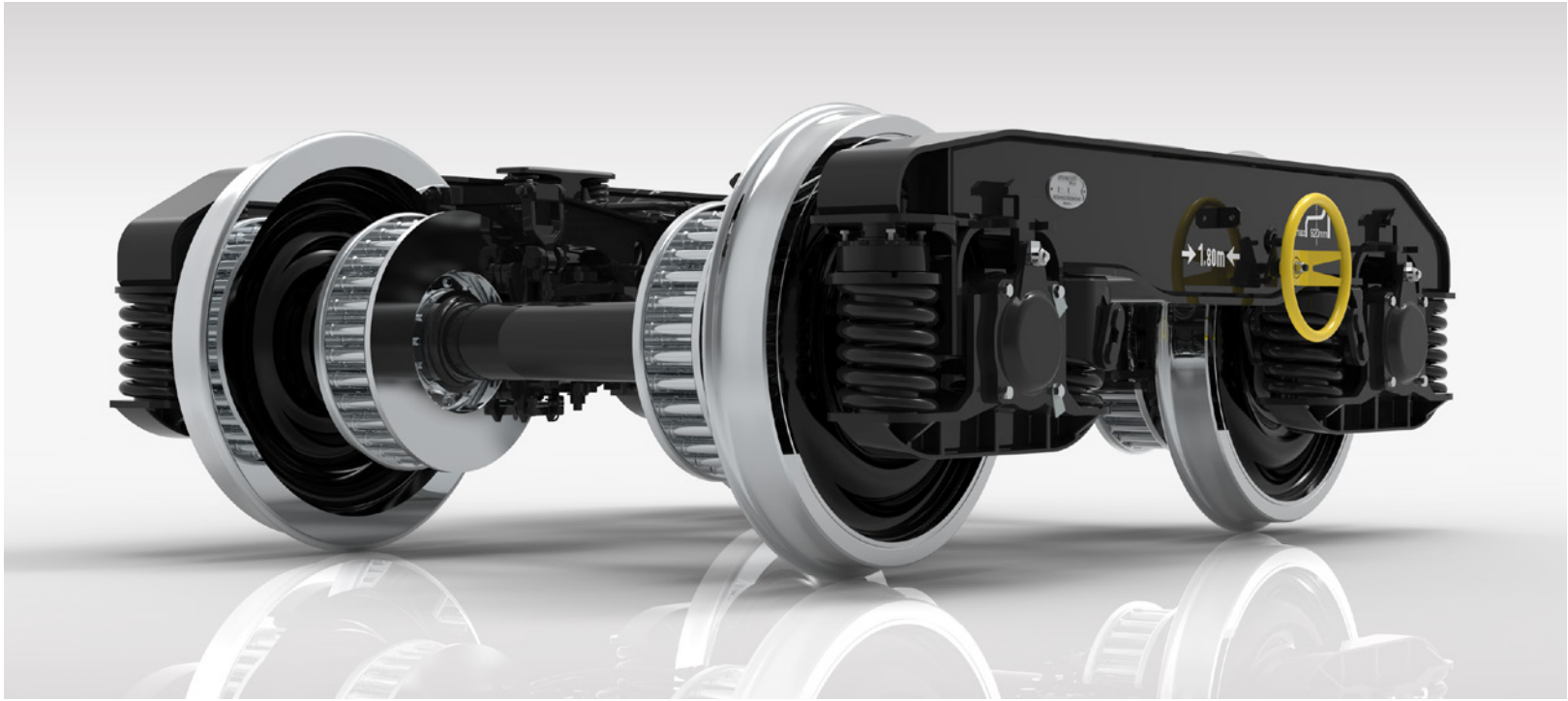

Features

- Radial steering of wheelsets (lower wheel wear).
- Lightweight frame designed for loads of 25t/axle.
- Disc brake different manufacturers (Knorr, Faiveley, Dako).
- The bogie is designed and approved as interoperability constituents in accordance with TSI.

Capabilities

- The bogie could be equipped with weighing valve or not, with handbrake or not.
- It can be equipped with different equipment according to customer requirements.

GB25RS | Bogies family 25.0 t / axle – with disc brake

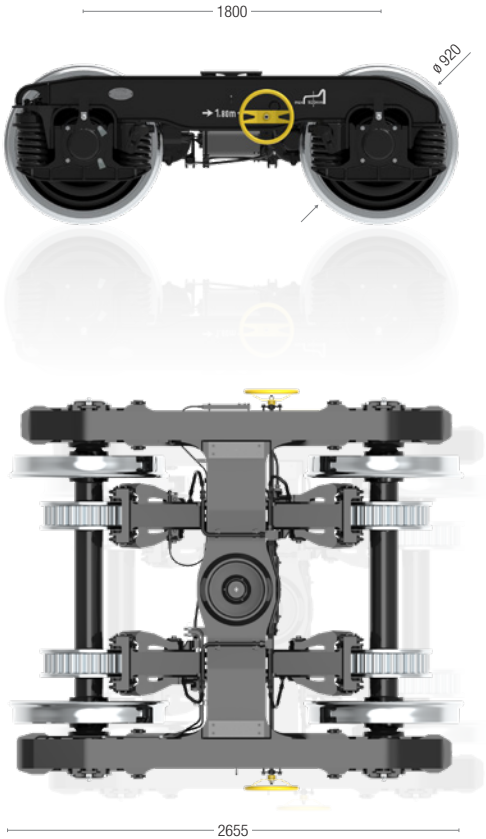

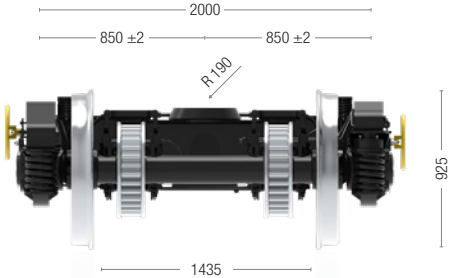

General parameters

Axle load	25.0 t / axle
Track gauge	1,435 mm
Loading gauge	G1-TSI
Brake regime	“S”
Brake type	Disc brake
Max. speed at 25.0 t / axle	100 km/h
Max. speed at 22.5 t/axle	120 km/h for disc brake
Climate condition	T1 from -25 °C to +40 °C
Tare weight	4,950 kg to 5,250 kg ± 2 % for disc brake system

The descriptions provided herein are for general information purposes only.

Y25Lsi(f)-DD1 | 2-axle bogie, 22.5 t / axle, with disc brake

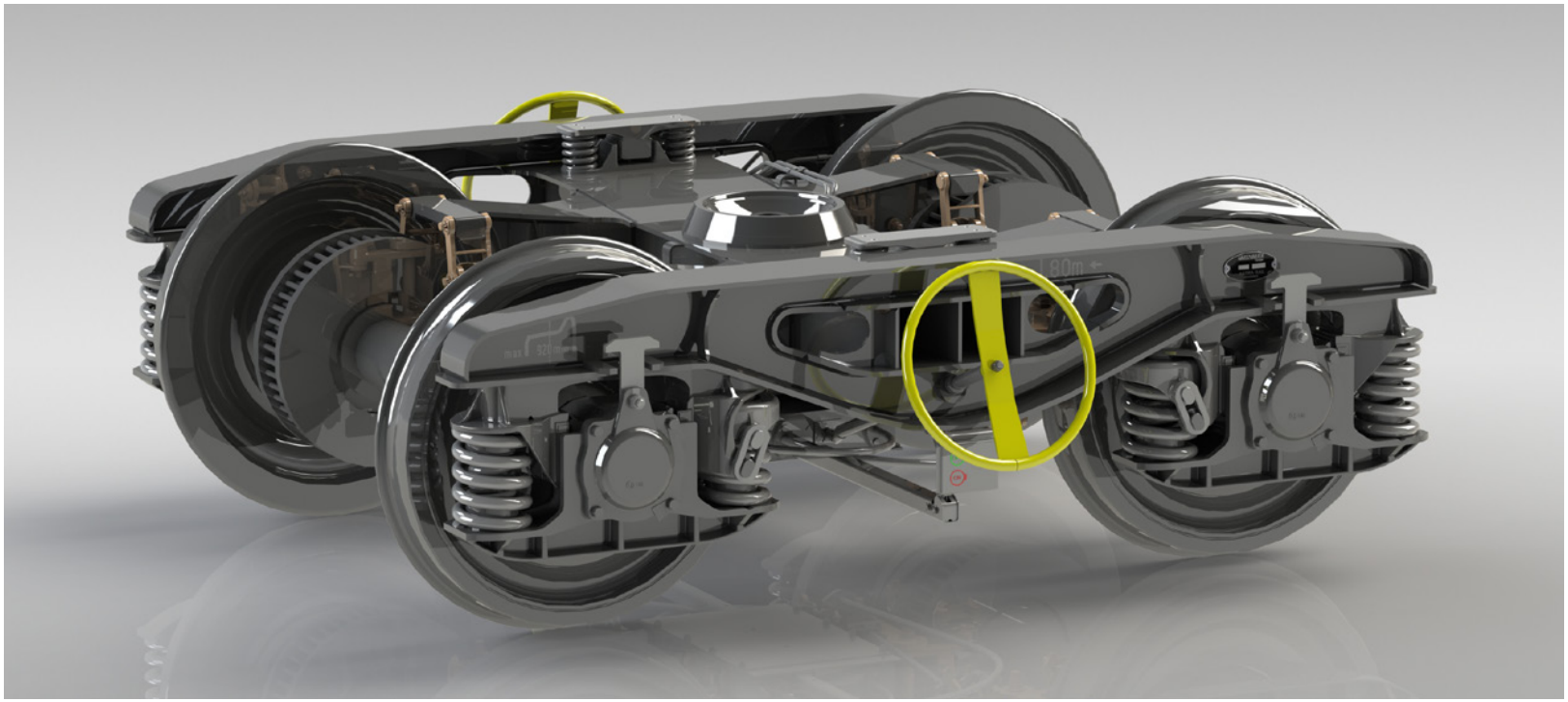

Features

- This special type of bogie with integrated brake is suitable for furnishing of various types of freight wagons where there is a problem with brake instalation directly onto the wagon.
- By assembly of this bogie type to the wagon, no additional spaces are required for fit up of the automatic brake and wearing of running profile is reduced.
- With addapted brake on wagon, the bogie can run with 140 km/h with empty wagon.
- The bogie is equipped with four calipers Dako 8″.
- May be used for RIV and TEN RIV traffic operation.

Capabilities

- The bogie can be equipped with weighing valve, upper central pivot and hand brake.
- The bogie configuration is variable and has the possibility to be assembeled with different equipment according to customer requirements.

Y25Lsi(f)-DD1 | 2-axle bogie, 22.5 t / axle, with disc brake

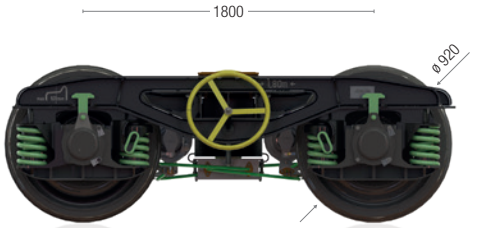

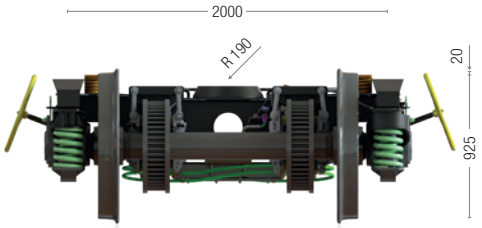

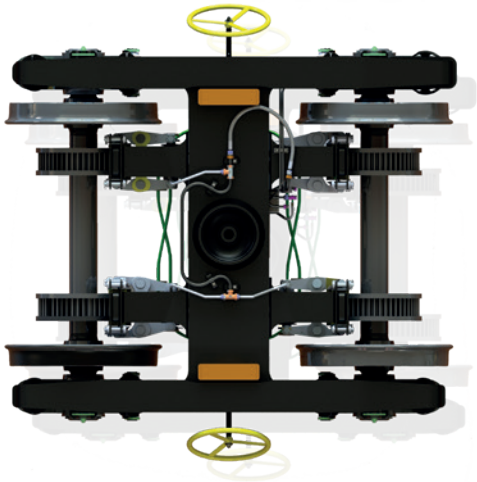

General parameters

Axle load	22.5 t / axle
Track gauge	1,435 mm
Loading gauge	G1-TSI
Brake regime	“S”
Brake shoe	400 cm^2
Brake caliper	4
Max. speed at 22.5 t / axle	100 km/h
Climate condition	T1
Tare weight	5,110 / 5,250 kg

The descriptions provided herein are for general information purposes only.

Y25Ls(s)d1-K | 2-axle bogie, 22.5 t / axle

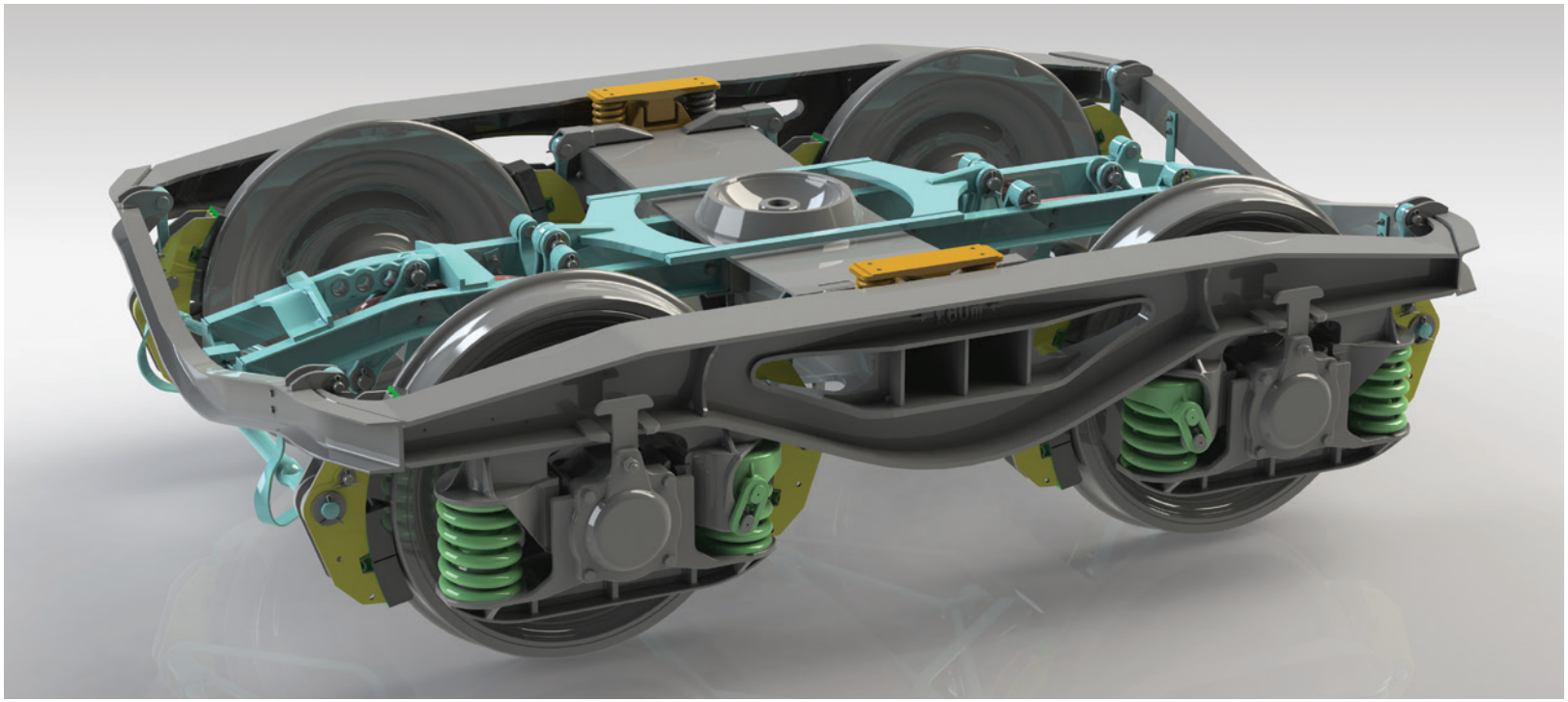

Features

- This standard type of bogie is suitable for various types of freight wagons.
- The bogie is TSI certified, in different variations: Y25Lsd1, Y25Lsd1-K, Y25Ls1, Y25Ls1-K, Y25Ls(s)1-K, Y25Ls(s)d1, Y25Ls(s)d1-K, BA 628/629, BA 628.4/629.4, BA 628.5/629.5.
- The bogie is designed and approved as interoperability constituents in accordance with TSI.

Capabilities

- The bogie could be assembled with weighing valve and upper central pivot.
- The bogie can be assembled with different equipment according to customer requirements.

Y25Ls(s)d1-K | 2-axle bogie, 22.5 t / axle

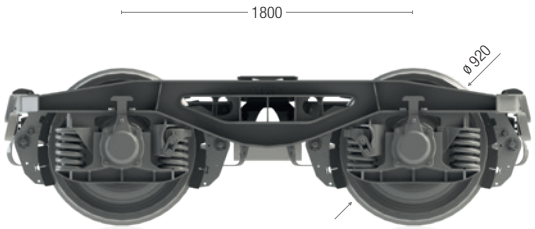

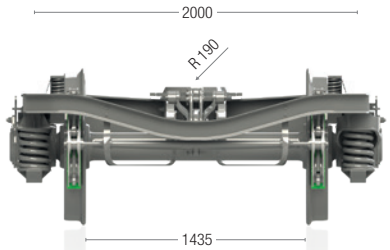

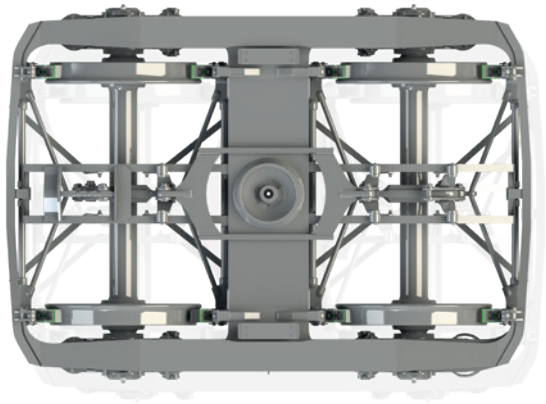

General parameters

Axle load	22.5 t / axle
Track gauge	1,435 mm
Loading gauge	G1-TSI
Brake regime	“S” or “SS”
Brake shoe	K or P10
Brake shoe holder	Bg or Bgu
Max. speed at 22.5 t / axle	100 km/h
Max. speed at 18.0 t / axle	120 km/h
Climate condition	T1
Tare weight	From ~ 4,450 kg to ~ 4,700 kg (SS with P10)

The descriptions provided herein are for general information purposes only.

Y25Ls(s)(d)i(f)1-K | 2-axle bogie, 22.5 t / axle

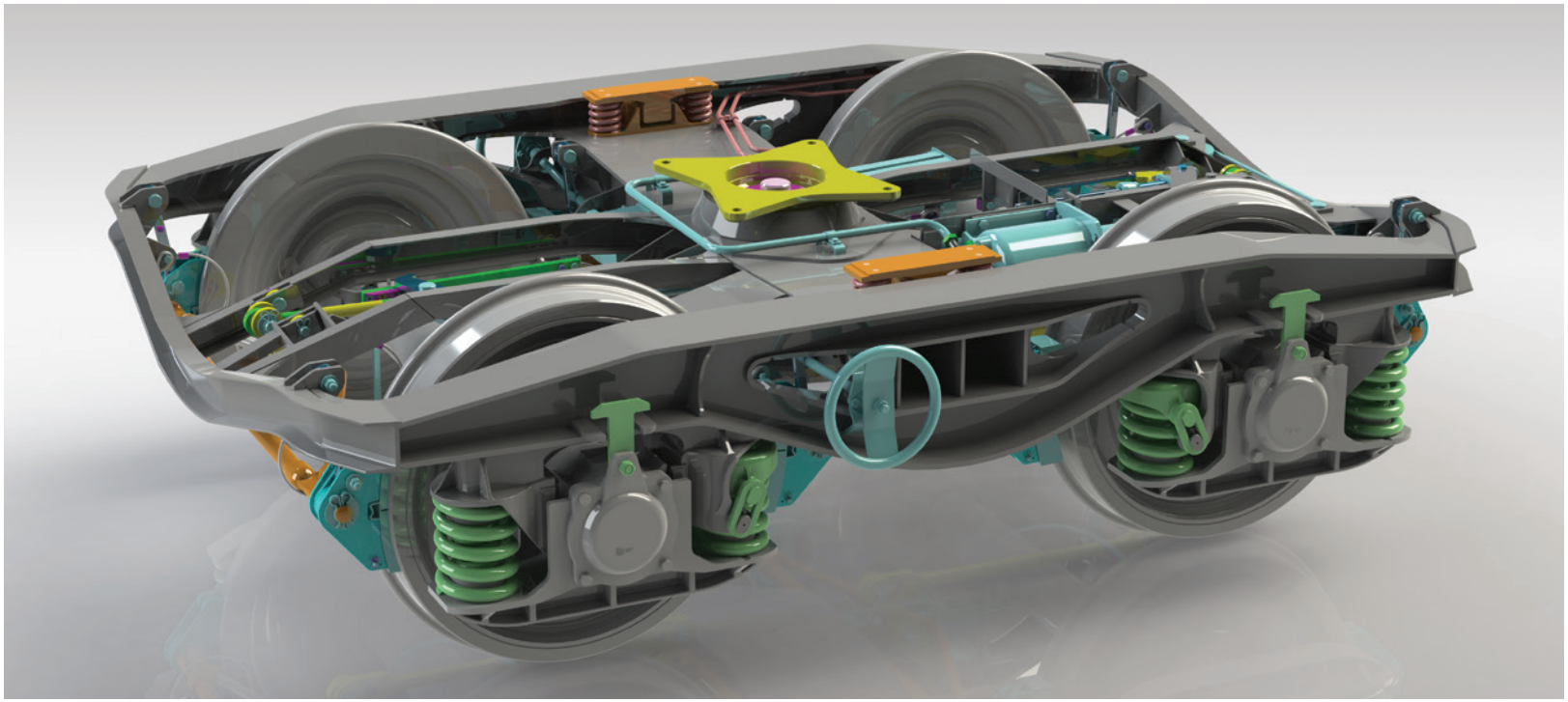

Features

- This special type of bogie with integrated brake is suitable for furnishing of various types of freight wagons where there is a problem with brake installation directly onto the wagon.
- The bogies are TSI certificated, in different variations: Y25Ls(d)i, Y25Ls(d)i-K, Y25Ls(s)(d)i-K, Y25Ls(d)if, Y25Ls(d)if-K, Y25Ls(s)(d)if-K.
- The bogie is designed and approved as interoperability constituents in accordance with TSI.
- May be used for RIV and TEN RIV traffic operation.

Capabilities

- The bogie could be equipped with weighing valve, upper central pivot and hand brake.
- The bogie is variable and has the possibility to be assembled with different equipment according to customer requirements.

Y25Ls(s)(d)i(f)1-K | 2-axle bogie, 22.5 t / axle

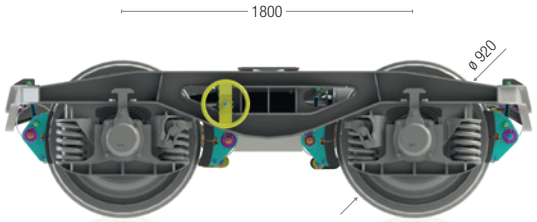

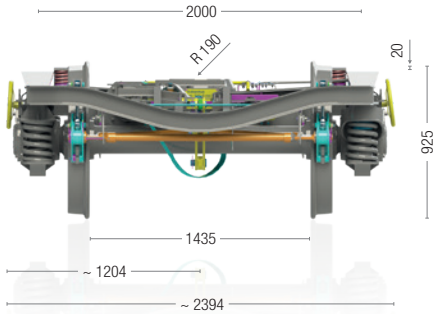

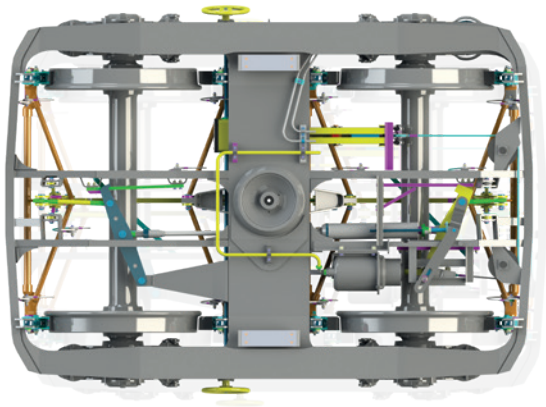

General parameters

Axle load	22.5 t / axle
Track gauge	1,435 mm
Loading gauge	G1-TSI
Brake regime	“S” or “SS”
Brake shoe	K or P10
Brake shoe holder	Bg or Bgu
Max. speed at 22.5 t / axle	100 km/h
Max. speed at 18.0 t / axle	120 km/h
Climate condition	T1
Tare weight	From ~ 4,450 kg to ~ 4,700 kg (SS with P10)

The descriptions provided herein are for general information purposes only.

Y25Lsdi(f)-KC1 | 2-axle bogie, 22.5 t / axle, with CFCB brake

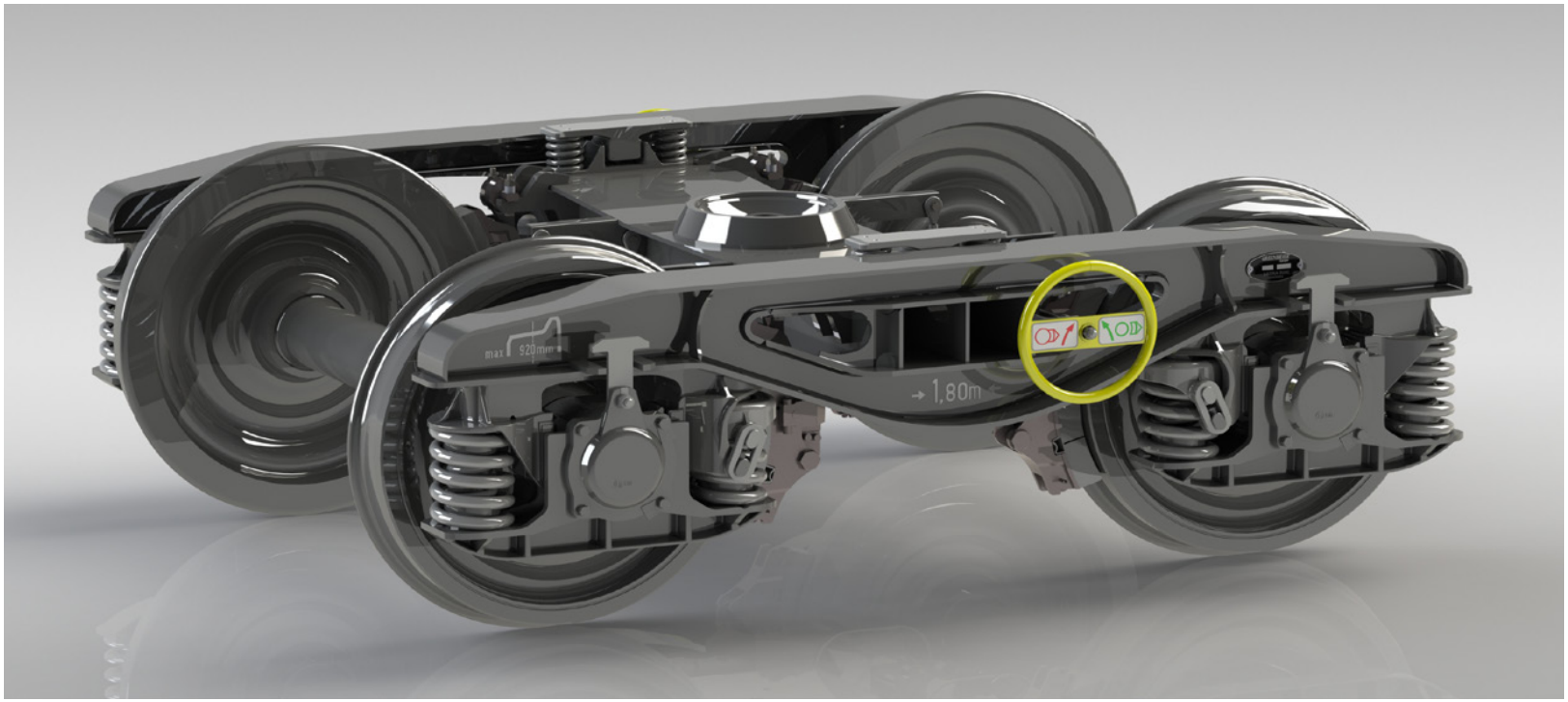

Features

- This special type of bogie with integrated brake is suitable for furnishing of various types of freight wagons where there is a problem with brake installation directly onto the wagon.
- With installation of this type bogie, weight and also space issues are solved.
- The bogie is equipped with one Knorr CFCB brake unit.
- May be used for RIV and TEN RIV traffic operation.

Capabilities

- The bogie could be assembled with weighing valve, upper central pivot and hand brake.
- The bogie is variable and has the possibility to be assembled with different equipment according to customer requirements.

Y25Lsdi(f)-KC1 | 2-axle bogie, 22.5 t / axle, with CFCB brake

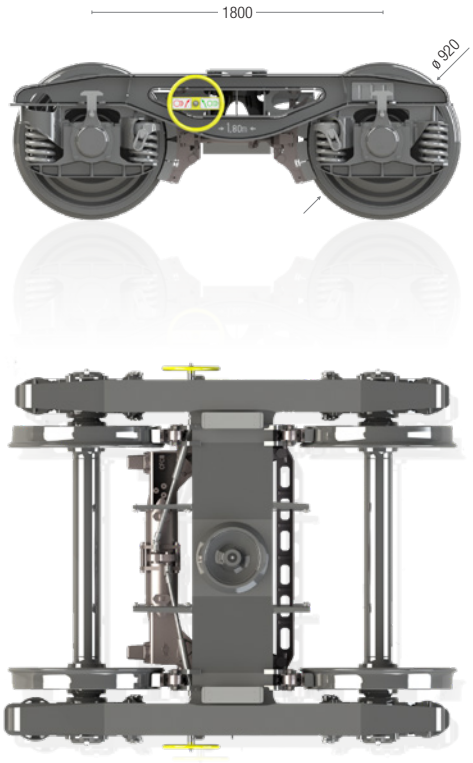

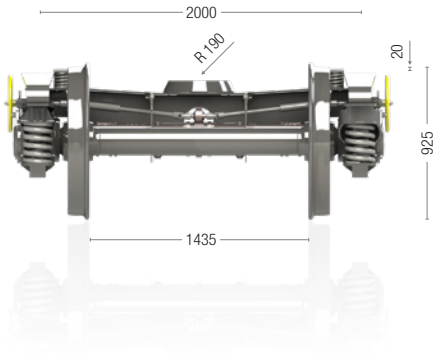

General parameters

Axle load	22.5 t / axle
Track gauge	1,435 mm
Loading gauge	G1-TSI
Brake regime	“S”
Brake shoe	K
Brake shoe holder	Bgu
Max. speed at 22.5 t / axle	100 km/h
Climate condition	T1
Tare weight	~ 4.2 t

The information provided herein is for general information purposes only.

Y33 | 2-axle bogie, 20.5 t

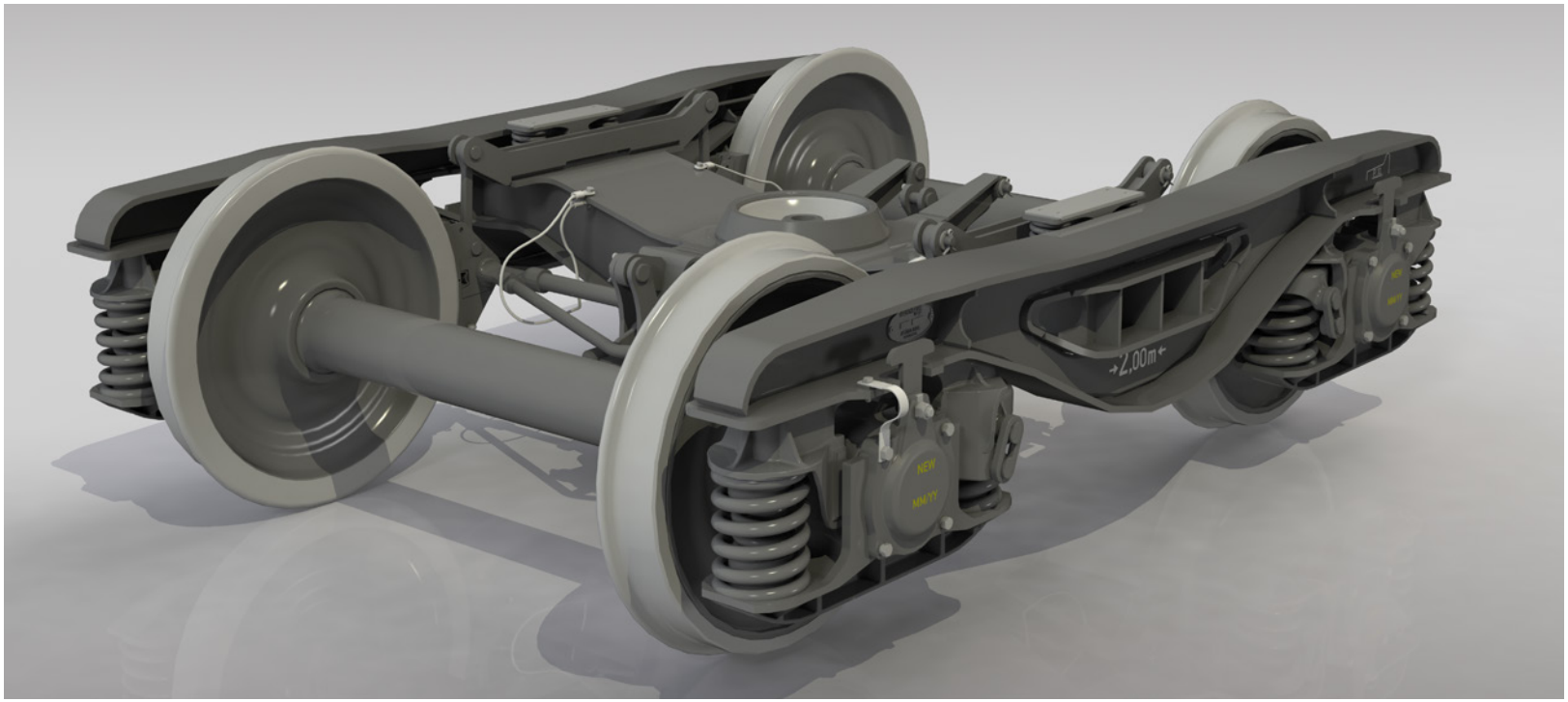

Features

- The bogie is developed for the operation in the UK. The bogie frame is fabricated without front and back transverse beams.
- The brake is simple, asymmetric, suitable for as called “push” brake.
- The bogie is optimized for the UK intermodal wagons, but it can fit any other wagon types.
- The bogie is NTSN certified, and it meets also NTR regulations, as well.

Capabilities

- The bogie is assembled with weighing valve and upper central pivot.
- The ER8 wheel material offers longer mileage between reprofiling.
- The bogie can be transformed to European operation.

Y33 | 2-axle bogie, 20.5 t

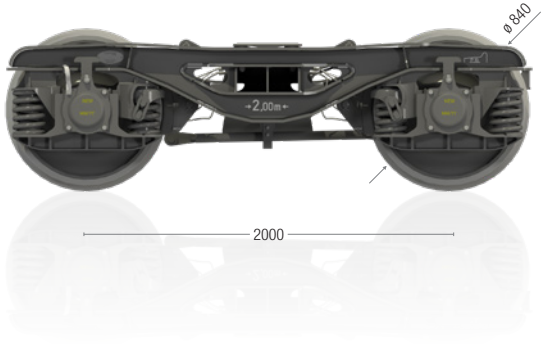

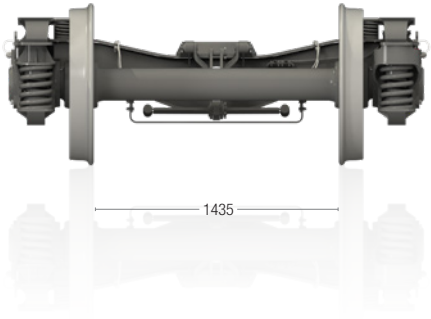

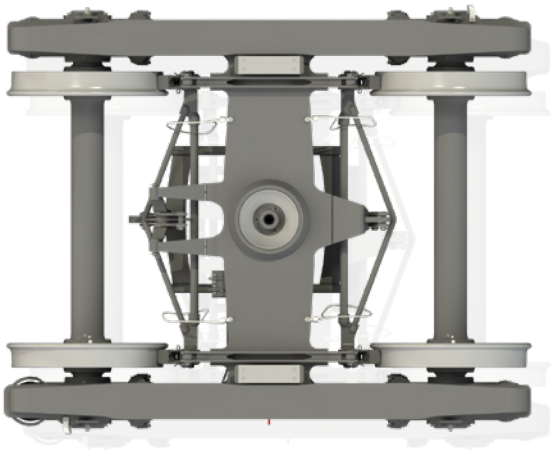

General parameters

Axle load	20.5 t / axle
Track gauge	1,435 mm
Wheel base	2.000 mm
Wheel diameter	840 mm
Brake regime	UK
Brake shoe	K 961
Brake shoe holder	1Bg
Max. speed at 20.5 t / axle	120 km/h
Climate condition	T1
Nominal weight	4,125 kg

The descriptions provided herein are for general information purposes only.

Imprint

Concept & Design
Triadon.de – Design offline & online
Thomas Pleimfeldner (Dipl. Designer)
Fichtering 11a
D-64572 Büttelborn

Phone: +49 61 52-927 57 40
Mobile: +49 179-22750 13
E-mail: pleimfeldner@triadon.de
Internet: www.triadon.de

www.greenbrier-europe.com

AstraRail Industries S.A.
41-43 Aurel Vlaicu Street
310141 Arad, ROMANIA

Telephone: +40 257 202 231
Telefax: +40 257 202 115
E-mail: Greenbrier.Europe@gbrx.com

Wagony Świdnica sp. z o.o.
ul. Strzelinska 35
58-100 Świdnica, POLAND

Telephone: +48 74 856 2000
Telefax: +48 74 853 0323
E-mail: Greenbrier.Europe@gbrx.com

Greenbrier Vagon San. Ve Tic. Ltd. Şti.
Acıdere OSB. Mah. Toroslar Cad. No: 15
Adana, TURKEY

E-mail: Greenbrier.Europe@gbrx.com